E3RA

ASBESTOS AND LEAD SURVEY

COLUMBIA VILLAGE (BUILDING 678)

WASHINGTON STATE UNIVERSITY
PULLMAN, WASHINGTON

WSU CONTRACT NO. 18523

Submitted to:

Mr. Richard Kizer
Washington State University
Architectural & Engineering Services
McCluskey Services Building
Post Office Box 641150
Pullman, Washington 99164-1150

Submitted by:

E3RA, Inc.
9802 - 29th Avenue West, Suite B102
Everett, Washington 98204

Project No. E09034

April 30, 2010

9802 29th Ave. W #B102
Everett, WA 98204
425-356-3372
425-356-3374 fax

E3RA

April 30, 2010

Washington State University
Architectural & Engineering Services
McCluskey Services Building
Post Office Box 641150
Pullman, Washington 99164-1150

Attention: Mr. Richard Kizer, AIA, LEED™ AP
Senior Architect

Subject: Asbestos and Lead-Containing Paint Survey
Columbia Village (Building 678)

Washington State University
Pullman, Washington
WSU Project #: 4171-2009

Dear Mr. Kizer:

The information provided herein documents an asbestos and lead-containing paint survey conducted by E3RA, Inc. (E3RA) at Columbia Village (Building 678). The survey, bulk sample collection, and sample preparation was conducted on January 10th - 26th, 2010 by Asbestos Hazard Emergency Response Act (AHERA)-Certified Building Inspectors and a Washington State Lead-Based Paint Program certified Inspector and Risk Assessor. The survey was limited to an evaluation of the presence and approximate quantity of asbestos-containing building material and lead-containing coatings (e.g. paint) potentially used in the construction of the above referenced facility.

E3RA trusts that the enclosed report provides WSU Facilities Operations Architectural & Engineering Services with the information required at this time. If you have questions about the information presented within this report, please contact the undersigned.

Sincerely,

E3RA, Inc.

Adam Stauffer
Staff Geologist
electronically signed 043010

Chad Kean, CHMM
electronically signed 043010

ASBESTOS AND LEAD-CONTAINING PAINT SURVEY
COLUMBIA VILLAGE (BUILDING 678)
WASHINGTON STATE UNIVERSITY
PULLMAN, WASHINGTON

At the request of Washington State University (WSU) Facility Operations Architectural & Engineering Services (FacOps), E3RA, Inc. (E3RA) performed a survey to identify the presence, location and quantity of asbestos-containing building material (ACBM) and lead (Pb)-containing paint (LCP) potentially used in the construction of the Columbia Village (Building 678) located on WSU's campus in Pullman, Washington. The purpose of the survey was to identify ACBM and LCP in anticipation of future projects to be planned by WSU and to evaluate potential lead hazards to occupants (tenants). This survey was performed in accordance with federal, state and local regulatory requirements.

Asbestos-Containing Materials

According to Washington Administrative Code (WAC) 296-62-07721, prior to the start of work, a building owner must identify the presence, location and quantity of ACBM and/or presumed asbestos-containing material (PACM) in the work area. This information must be communicated to contractors bidding on work, contractors performing other work, employees and tenants in or adjacent to the work area. This survey was intended to assist WSU – FacOps in meeting those regulatory requirements.

The following ACBM was identified:

- Sheet Vinyl Flooring (tan/gold square terrazzo pattern) with Mastic (yellow)
- Window Putty (black)
- Sink Undercoating (black)
- Exterior Foundation Sealant (black)

In addition to the ACBM identified above the following material was found to contain less than one percent asbestos by individual layer analysis or composite analysis:

- Gypsum Board Wall System (gypsum board, tape, joint compound)
- Wall Texture Compound (orange peel)

Table 1, *Bulk Asbestos Fiber Analysis*, attached to the main report, summarizes sample number, material description, location, and the analytical results. In addition, WSU was provided with an electronic spreadsheet of the information presented in Table 1.

Lead-Containing Paints

An inspection and representative sampling of suspect LCP throughout Columbia Village was conducted so that construction and maintenance workers could identify the location and quantity of lead in surface coatings that may impact their work. The inspection was also performed in accordance with the U.S. Environmental Protection Agency (EPA) and the U.S. Department of Housing and Urban Development (HUD) guidelines for lead-based paint inspections for the purpose of communicating potential lead hazards to tenants. Samples of suspect LCP were analyzed in-situ with a hand-held, direct-reading Niton X-Ray Fluorescence (XRF) spectrum analyzer. XRF analysis indicates that six of the 2,310 samples analyzed contain a concentration of lead greater than the HUD lead-based classification guideline of 1.0 milligram per square centimeter (mg/cm^2). The remaining surfaces surveyed are not considered to be lead-based paints (greater than 1.0 mg/cm^2); however, XRF readings indicate that some of the surfaces contain quantities of lead that may classify as a regulated hazard during certain construction activities.

The following "lead-based paints" were identified:

No interior building components were identified as part of this inspection.

<u>Exterior Building Components:</u>

- Unit L-35 – Porch Rear – Door – Blue Metal
- Unit L-38 – Porch Rear – Door – Green Metal
- Unit Q-53 – Porch Rear – Door – Green Metal
- Building C – Exterior – Door – Purple Metal

Table 2, *XFR Data*, attached to the main report, summarizes sample number, paint color, building component, substrate and the analytical result. In addition, WSU was provided with an electronic spreadsheet of the information presented in Table 2.

A summary of this report must be provided to new lessees (tenants) and purchasers of this property under Federal law (24 CFR part 35 and 40 CFR part 745) before they become obligated under a lease or sales contract. The complete report must also be provided to new purchasers and it must be made available to new tenants. Landlords (lessors) and sellers are also required to distribute an educational pamphlet approved by the U.S. Environmental Protection Agency and include standard warning language in their leases or sales contracts to ensure that parents have the information they need to protect their children from lead-based paint hazards.

PROJECT TITLE:	Asbestos and Lead-Containing Paint Survey
LOCATION:	Columbia Village (Building 678), WSU, Pullman, Washington
CLIENT:	WSU FacOps
E3RA JOB NUMBER:	E09034
WSU CONTRACT NO.:	**18523**
WSU PROJECT NO.:	**4171-2009**

The following Asbestos Hazard Emergency Response Act (AHERA)-certified Building Inspectors (BI) and Washington State Lead-Based Paint Program (WSLBPP) certified Inspector and Risk Assessor performed the survey:

Casey Lowe (AHERA BI)
Certification Number 104662
Expiration date: October 21, 2010

Adam Stauffer (AHERA BI)
Certification Number 3508-09-09-5367
Expiration date: September 10, 2010

Chad Kean (AHERA BI)
Certification Number 10304383
Expiration date: March 11, 2010

Chad Kean (WSLBPP)
Certification Number 0670
Expiration date: January 11, 2011

TABLE OF CONTENTS

ASBESTOS AND LEAD-CONTAINING PAINT SURVEY
COLUMBIA VILLAGE (BUILDING 678)
WASHINGTON STATE UNIVERSITY
PULLMAN, WASHINGTON

1.0 INTRODUCTION

E3RA, Inc. (E3RA) was retained by Washington State University (WSU) Facility Operations Architectural & Engineering Services (FacOps) to conduct an assessment of asbestos-containing building material (ACBM) and lead (Pb)-containing paint (LCP) potentially used in the construction of the Columbia Village (Building 678) at Washington State University in Pullman, Washington. This survey was performed in accordance with E3RA's proposal, dated December 7, 2009, and federal, state and local regulatory requirements.

1.1 Objective

The objective of the survey was to evaluate the potential presence of ACBM and LCP within and on the exterior of the Columbia Village that could be impacted during renovation projects and to evaluate potential lead hazards to occupants (tenants). The asbestos survey was conducted in general accordance with the "Good Faith" asbestos survey requirements in the Washington Administrative Code (WAC) 296-62-07721, (Communication of Hazards to Employees) as required by the Washington State Department of Labor and Industry (L&I) for buildings that are to be renovated.

The LCP inspection was conducted to provide information to assist in complying with WAC 296-155-176 (Lead in Construction). In addition, the inspection was also performed in accordance with the U.S. Environmental Protection Agency (EPA) and the U.S. Department of Housing and Urban Development (HUD) guidelines for lead-based paint inspections for the purpose of communicating potential lead hazards to tenants.

1.2 Scope of Work

The scope of services for the asbestos and lead-containing paint assessment included the following tasks:

- Perform a "Good Faith" asbestos survey to identify the presence, location, and quantity of ACBM and presumed asbestos-containing material (PACM) within and on the exterior of the buildings. The survey did not include areas beyond the 'foot print' of the buildings. Materials identified as suspect materials were sampled or presumed in accordance with the Asbestos Hazard Emergency Response Act (AHERA) sampling requirements 40 Code of Federal Regulations (CFR) 763.86 and analyzed by a National Voluntary Laboratory Accreditation Program (NVLAP) accredited laboratory for the presence and quantify of asbestos. Samples were analyzed using polarized light microscopy (PLM) Environmental Protection Agency (EPA) Method 600/R-93/116.

- Perform a survey to identify LCP within and on the exterior of the buildings. The survey was conducted in accordance with Chapter 7 (Lead-Based Paint Inspection) of the *Guidelines for the Evaluation and Control of Lead-Based Paint Hazards in Housing* published by HUD in October 1997. The lead assessment included field analysis with a direct-reading, hand-held Niton X-Ray Fluorescence (XRF) spectrum analyzer.

- Incorporation of the results of the survey this report which includes a description of survey methodology, material descriptions, sample location drawings, results of sample analysis, and material quantities as applicable.

1.3 Limitations of the Assessment

The conclusions within this report are professional opinions based solely upon visual site observations and interpretations of analytical data as described in this report. Typical construction techniques can render portions of the building inaccessible. As a result, additional ACBM and LCP may be present in inaccessible areas (e.g., within wall cavities and above hard ceilings). Suspect ACBM and LCP within inaccessible areas and/or not identified in this report should be so presumed until characterized.

The opinions presented herein apply to the site conditions existing at the time of the investigation and interpretation of current regulations pertaining to asbestos and lead. Opinions and recommendations provided herein may not apply to future conditions that may exist at the site. Regulatory requirements in effect at the time of the work should be verified prior to any work that impacts regulated materials. This report represents the findings of this survey only, and is not intended to establish scope or contractual terms to regulated material abatement.

2.0 SITE DESCRIPTION

The Columbia Village is a 15 building apartment complex made up of single and two-story buildings with slab-on-grade construction with pitched, three-tab composite roofs. The complex was constructed in 1975. Heat for the individual units is supplied by electric baseboard heaters. The exteriors of the buildings are a mix of concrete, wood siding, wood, metal and glass.

Interior horizontal finishes include vinyl floor tile and sheeting, carpet, gypsum board wall systems (gypsum board, tape, and joint compound), wood and finished concrete. Interior vertical finishes include gypsum board wall systems, glass, concrete, wood and Formica.

3.0 METHODOLOGY

Information concerning the subject property was obtained during site inspections conducted by E3RA representatives Mr. Chad Kean, Mr. Casey Lowe and Mr. Adam Stauffer on January 10th - 26th, 2010. This section describes the sampling methodology. Supporting documentation provided within the survey report includes material summary tables and the appendices that include site photographs, laboratory analytical reports, chain-of-custodies, and staff/laboratory certifications.

3.1 Asbestos Survey Methodology

A 'walk-through' inspection of accessible areas was conducted to identify suspect ACBM and PACM. Sub-surface suspect materials within wall and ceiling cavities were not investigated. However, the survey attempted to identify thermal system insulation (TSI) on mechanical piping systems that may be in wall cavities by studying the system configuration and 'tracing' visible TSI. The asbestos survey was performed by AHERA-certified building inspectors in accordance with a sampling protocol appropriate for the renovation of existing structures. The inspectors' AHERA certifications are provided in Appendix C. The sampling protocol was modeled after 40 CFR 763.86 and WAC 296-62-077021. The approximate quantity of materials was obtained from scaled drawings provided by WSU FacOps and by field measurements.

3.1.1 Sampling and Sample Documentation

Suspect ACBM was grouped into homogeneous sampling areas (HSA) and categorized according to 40 CFR 763, as TSI, surfacing material, or miscellaneous material. The sampling plan included, at a minimum, the collection and analysis of samples as follows:

Thermal System Insulation

- In a distributive manner, a minimum of three samples of each HSA that was not presumed to contain asbestos.
- At least one bulk sample from each homogenous area of patched TSI if the patch was less than 6 square feet.

Surfacing Material

- In a distributive manner, a minimum of three samples collected from each homogenous area that was 1,000 square feet or less.
- A minimum of five samples collected from each homogenous area that was greater than 1,000 square feet but less than or equal to 5,000 square feet.
- A minimum of seven samples collected from each homogenous area that was greater than 5,000 square feet.

Miscellaneous Material

- In a distributive manner as deemed sufficient by the Inspector. At least one sample was collected of each suspect miscellaneous material not presumed to contain asbestos.

Non-Suspect Materials

- According to 40 CFR 763.86(4), bulk samples are not required to be collected from any homogeneous area where the accredited inspector has determined that the thermal system insulation is fiberglass, foam glass, rubber, or other non-ACBM.

Samples were collected by carefully removing small portions of the suspect material with a sharp knife or other hand tool suitable to the material being sampled. Each sample was placed in a labeled plastic

container immediately after collection. Sample containers were then placed in a large re-sealable plastic bag for transportation to the laboratory. The sampling instrument was wiped with a clean moist cloth to decontaminate the tool and minimize the potential release of asbestos fibers or contamination of subsequent samples. Data pertinent to each sample (e.g., date, sample number, material description, and material category) was recorded on a field data sheet. Figures 1, 2, 3, 4 and 5, attached, are floor plans that have been modified to identify approximate asbestos sample locations. Photographs of selected ACBM, identified during the survey, are provided in Appendix A.

3.1.2 Laboratory Analysis

Asbestos bulk samples and chain-of-custody submittal sheets were shipped by FedEx® to CA Labs, LLC (CAL) in Baton Rouge, Louisiana for asbestos analysis. CAL participates in the NVLAP for quality control procedures. As specified in 40 CFR Chapter I (1-1-87 edition) Part 763, Subpart F, Appendix A, each sample was analyzed using PLM/dispersion staining techniques in accordance with EPA Method 600/R-93/116. The detection limit for this type of analysis is approximately one percent (by volume). Materials containing more than one percent asbestos are considered to be ACBM. CAL performs reanalysis of five percent of bulk samples for the purpose of internal quality control. Laboratory analytical data reports and chain-of-custody forms are provided in Appendix B. Laboratory certifications are provided in Appendix D.

3.2 Lead Paint Survey Methodology

A Washington State Lead-Based Paint Program certified Inspector and Risk Assessor and an AHERA-certified Building Inspector, experienced in the identification and sampling of LCP using portable XRF - lead identification technology, performed the LCP survey. The XRF used for the inspection was a Niton Model No. XLp 303A Lead Paint Analyzer (Serial No. 11661) supplied by the WSU Environmental Health & Safety. According to the manufacturer's operational instructions, the instrument's response was verified prior to and after use with the following National Institute of Standards and Testing (NIST) Standard Reference Material (SRM): SRM 2571 lead film (3.58 milligrams per square centimeter (mg/cm^2)), SRM 2572 lead film (1.53 mg/cm^2), SRM 2573 lead film (1.04 mg/cm^2), SRM 2574 lead film (0.71 mg/cm^2) and SRM 2575 lead film (0.31 mg/cm^2). In addition, SRM response checks were conducted between every unit and/or every four consecutive hours of run time. Throughout the survey, the instrument maintained a consistent calibration reading within the manufacturer's performance standards for both the internal standard and the NIST SRM lead standards.

The survey was conducted in accordance with Chapter 7 (Lead-Based Paint Inspection) of the *Guidelines for the Evaluation and Control of Lead-Based Paint Hazards in Housing* published by HUD in October 1997 which includes exterior and interior XRF readings of representative painted surfaces for each building component in each room or equivalent. Wall "A" in each unit is the wall where the front entrance door opening is located (or aligned with the street/walkway). Proceeding clockwise starting at wall "A" walls were labeled in alphabetical order with wall "A" always being designated as noted above. Figures L1, L2, L3, L4 and L5, attached, are floor plans that have been modified to identify the wall labeling scheme for each unit type.

4.0 RESULTS

The following details the results of the asbestos and lead assessment survey.

4.1 Asbestos Investigation

A total of 59 bulk samples were collected as part of the survey. Of these samples, 10 were identified through laboratory analysis as regulated ACBM (greater than 1% asbestos). A summary of the asbestos sampling and results is presented in Table 1, *Bulk Asbestos Fiber Analysis* after the main report section. Table 1 includes the sample number, material description, location, and the analytical results.

The following ACBM was identified:

- Sheet Vinyl Flooring (tan/gold square terrazzo pattern) with Mastic (yellow)
- Window Putty (black)
- Sink Undercoating (black)
- Exterior Foundation Sealant (black)

In addition to the ACBM identified above the following material was found to contain less than one percent asbestos by individual layer analysis or composite analysis:

- Gypsum Board Wall System (gypsum board, tape, joint compound)
- Wall Texture Compound (orange peel)

Commonly "suspect" materials that were sampled and identified as non-ACBM include:

- Vinyl Cove Base (grey 4") with Adhesive (brown)
- Vinyl Floor Tile (grey 12"x12" with grey/white splotches w/red/blue/yellow/green accent tiles) with Mastic (tan)
- Vinyl Cove Base (black 4") with Adhesive (white)
- Leveling Compound (grey)
- Sheet Vinyl Flooring (tan speckle pattern) with Mastic (yellow)
- Vinyl Cove Base (black) with Adhesive (white)
- Sheet Vinyl Flooring (white speckle pattern) with Mastic (yellow)
- Sheet Vinyl Flooring (terracotta 12"x12" pattern) with Mastic (yellow)
- Sheet Vinyl Flooring (white/tan pebble terrazzo pattern) with Mastic (yellow)
- Composite 3-Tab Roofing (brown)
- Exterior Caulking (white)
- Adhesive (yellow on Formica)
- Fiber Board
- Fiberglass Insulation Paper Backing (black)
- Adhesive (yellow on Formica)
- Sink Undercoating (white)
- Sink Undercoating (black tar like)

It should be noted that other suspect ACBM that was not sampled during this survey might be present within or on the outside of the subject buildings. If suspect ACBM not identified in this report is found during construction activities, it is recommended that such materials be characterized prior to being disturbed.

4.2 Lead Paint Investigation

In accordance with *Table 7.3: Number of Units to be Tested in Multifamily Developments* from Chapter 7 (Lead-Based Paint Inspection) of the HUD guidelines 22 randomly chosen representative units were selected from the 54 total units and inspected in addition to common areas and building exteriors. A total of 2,310 representative coatings from the interior and exterior of the buildings were analyzed by XRF. Table 2, *XFR Data*, attached to the main report, summarizes sample number, paint color, building component, substrate and the analytical result reported in mg/cm^2. Six of the painted materials analyzed exceeded the HUD lead-based paint guideline of 1.0 mg/cm^2. The remaining surfaces surveyed are not considered to be lead-based paints (greater than 1.0 mg/cm^2); however, XRF readings indicate that some of the surfaces contain quantities of lead that may classify as a regulated hazard during certain construction activities.

The following "lead-based paints" were identified:

No interior building components were identified as part of this inspection.

Exterior Building Components:

- Unit L-35 – Porch Rear – Door – Blue Metal
- Unit L-38 – Porch Rear – Door – Green Metal
- Unit Q-53 – Porch Rear – Door – Green Metal
- Building C – Exterior – Door – Purple Metal

5.0 CONCLUSIONS AND RECOMMENDATIONS

A copy of this report should be provided to contractors bidding on work and each contractor must have a copy of this report during any scheduled construction activities that may impact suspect or confirmed regulated building materials.

5.1 Asbestos-Containing Materials

Current federal, state, and local regulations require that a licensed asbestos-abatement contractor and trained workers remove ACBM. Prior to abatement of ACBM, current regulations require that notifications be filed with L&I Division of Occupational Safety and Health (DOSH) and Ecology's Eastern Regional Office at least 10 days prior to commencement of the removal project. The DOSH requires pre-abatement air monitoring and clearance air sampling upon completion of the asbestos abatement project. An asbestos removal project is not complete until the analytical results from clearance samples indicate that the residual fiber levels in the ambient air are within acceptable limits. Following removal of the ACBM, asbestos-containing debris must be disposed of at a landfill that accepts asbestos waste in accordance with the current federal, state, and local regulations.

Work that disturbs a gypsum board wall system containing asbestos but determined to be less than one percent asbestos by individual layer analysis or composite analysis of full-depth samples is not considered an asbestos project or an asbestos abatement project by Washington State Department of L&I. However,

basic asbestos work practices and training requirements still apply. These basic requirements include the following:

1. Engineering controls and work practices given in WAC 296-62-07712(2).
2. Two-hour awareness training consistent with the course developed by the EPA.
3. A competent person must be assigned to the project and trained according to WAC 296-62-07728(5)(b)(ii).

As previously noted, there is a possibility that other suspect ACBM may be present within the building that was not sampled during this survey. Contractors should use caution when performing work within the project areas even after the completion of asbestos abatement. Should work activities discover additional concealed suspect ACBM not already sampled, workers should avoid damaging those materials until they have been properly sampled, analyzed and abated in accordance with local, state, and federal regulations.

5.2 Lead-Containing Paint

The summary of LCP at the subject site was prepared so construction and maintenance workers can identify the location and quantity of lead in surface coatings that may impact their work. The provided LCP summary may be used in conjunction with other applicable data (e.g., air monitoring) to evaluate the potential for elevated occupational lead exposures during construction activities. Although the majority of paints applied are not considered to be lead-based paints (greater than 1.0 mg/cm^2), analytical data indicates that some may contain quantities of lead that exceed the DOSH Construction Standards for any detectable concentration of lead and may be classified as a potential exposure hazard during certain construction activities. Contractors and WSU employees performing construction and maintenance work should be aware of the lead construction standard and provide proper worker protection.

If material coated with LCP is disposed of as part of any future projects, some or all of the demolition debris may be subject to the requirements of Washington State Department of Ecology (WAC 173-303-090). According to WAC 173-303-090, a solid waste in which the TCLP for lead exceeds five milligrams per liter (mg/L) would designate as a dangerous waste for the purpose of disposal. However, based upon the observed lead concentrations, it is not anticipated that the general construction debris would classify as dangerous waste.

The results of this inspection indicate that four building components tested positive for lead in amounts greater than or equal to 1.0 mg/cm^2 in paint, using the inspection protocol in Chapter 7 of the *HUD Guidelines for the Evaluation and Control of Lead-Based Paint Hazards in Housing (1997 Revision)*. A summary of this report must be provided to new lessees (tenants) and purchasers of this property under Federal law (24 CFR part 35 and 40 CFR part 745) before they become obligated under a lease or sales contract. The complete report must also be provided to new purchasers and it must be made available to new tenants. Landlords (lessors) and sellers are also required to distribute an educational pamphlet approved by the U.S. Environmental Protection Agency and include standard warning language in their leases or sales contracts to ensure that parents have the information they need to protect their children from lead-based paint hazards.

Lead-based paint is a common cause of lead poisoning in children and represents a threat to the health and welfare of the occupants. Where economically feasible, it is recommended that components that tested positive, and any similar untested components, be considered lead-laden and lead-safe procedures be

incorporated into any overall renovation and maintenance strategy. Safe methods include: containing any work area to prevent dispersal of lead dust and chips, wet sanding and scraping at a minimum; collecting all paint chips and debris and, properly disposing of them.

TABLE 1
BULK ASBESTOS FIBER ANALYSIS

Sample Number	Description	Type	Location / Estimated Quantity[1]	Percent Asbestos
CB-01-1	Vinyl Cove Base (grey 4") w/ Adhesive (brown)	Misc	Throughout / NA	ND (all layers)
SVF-01-1 and SVF-01-2	**Sheet Vinyl Flooring (tan/gold square terrazzo pattern) w/ Mastic (yellow)**	**Misc**	**Units A1, A2, B3, B4, B5, B6, C7, C8, C9, C10, D11, D12, D13, D14, E15, E16, E17, E18, F-Bath, G19, G20, G21, G22, H23, H24, H25, H26, J27, J28, J29, J30, K31, K32, K33, K34, L35, L36, L37, L38, M39, M40, M41, M42, N43, N44, N45, N46, P47, P48, P49, P50, Q51, Q52, Q53, Q54 / 4,700 SF**	**23% Chrysotile (sheet vinyl) 2-3% Chrysotile (Mastic)**
VT-01-1	Vinyl Floor Tile (grey 12"x12" w/ grey/white splotches w/red/blue/yellow/green accent tiles) w/ Mastic (tan)	Misc	Building F-Laundry / NA	ND (all layers)
CB-02-1	Vinyl Cove Base (black 4") w/ Adhesive (white)	Misc	Throughout / NA	ND (all layers)
LC-01-1	Leveling Compound (grey)	Misc	Throughout / NA	ND (all layers)
SVF-02-1	Sheet Vinyl Flooring (tan speckle pattern) w/ Mastic (yellow)	Misc	Units A1, A2, B5, G21, H26, J27, M41, N45, P50 / NA	ND (all layers)
CB-03-1	Vinyl Cove Base (black) w/ Adhesive (white)	Misc	Throughout / NA	ND (all layers)
SVF-03-1	Sheet Vinyl Flooring (white speckle pattern) w/ Mastic (yellow)	Misc	Units C9, C10, D11, G19, K33, L37, L38, P49 / NA	ND (all layers)
SVF-04-1	Sheet Vinyl Flooring (terracotta 12"x12" pattern) w/ Mastic (yellow)	Misc	Units J29 and L35 / NA	ND (all layers)
SVF-05-1	Sheet Vinyl Flooring (white/tan pebble terrazzo pattern) w/ Mastic (yellow)	Misc	Unit P47 / NA	ND (all layers)
RF-01-1 to RF-01-5	Composite 3-Tab Roofing (brown)	Misc	Throughout / NA	ND (all layers)
EC-01-1	Exterior Caulking (white)	Misc	Throughout / NA	ND

TABLE 1
BULK ASBESTOS FIBER ANALYSIS

Sample Number	Description	Type	Location / Estimated Quantity[1]	Percent Asbestos
AD-01-1	Adhesive (yellow on Formica)	Misc	Throughout / NA	ND
WG-01-1	**Window Putty (black)**	**Misc**	**Building F Windows / 10 WU**	**3% Chrysotile**
FB-01-1	Fiber Board	Misc	Building F-Laundry / NA	ND
IS-01-1	Fiberglass Insulation Paper Backing (black)	Misc	Throughout / NA	ND (all layers)
SU-01-1 and SU-01-2	**Sink Undercoating (black)**	**Misc**	**Units A1, A2, C7, C8, C9, C10, D11, D12, D13, D14, E15, E16, E17, E18, J27, K31, K32, K33, K34, L35, L36, L37, L38, M39, M40, M41, M42, N43, N44, N45, N46, P47, P48, P49, P50, Q51, Q52 / 37 SU**	**2-3% Chrysotile**
AD-02-1	Adhesive (yellow on Formica)	Misc	Throughout / NA	ND
SU-02-1	Sink Undercoating (white)	Misc	Throughout / NA	ND
SU-03-1	Sink Undercoating (black tar like)	Misc	Units Q53 and Q54 / NA	ND (all layers)
ES-01-1 to ES-01-5	**Exterior Foundation Sealant (black)**	**Surf**	**On Exterior Foundations / Throughout Exterior**	**2% Chrysotile**
GWB-01-1	Gypsum Board Wall System (gypsum board, tape, joint compound)	Misc/ Surf	Throughout / NA	ND (all layers)
GWB-01-2 and GWB-01-4	Gypsum Board Wall System (gypsum board, tape, joint compound)	Misc/ Surf	Throughout / NA	2% Chrysotile[2] (white compound) 2% Chrysotile[2] (joint compound) ND (gypsum board)
GWB-01-3	Gypsum Board Wall System (gypsum board, tape, joint compound)	Misc/ Surf	Throughout / NA	2% Chrysotile[2] (white compound) NA (joint compound) ND (gypsum board)

TABLE 1
BULK ASBESTOS FIBER ANALYSIS

Sample Number	Description	Type	Location / Estimated Quantity[1]	Percent Asbestos
GWB-01-5, GWB-01-6, GWB-01-8, GWB-01-9, GWB-01-10, GWB-01-13	Gypsum Board Wall System (gypsum board, tape, joint compound)	Misc/ Surf	Throughout / NA	<1% Chrysotile (white compound) <1% Chrysotile (joint compound) ND (gypsum board)
GWB-01-7	Gypsum Board Wall System (gypsum board, tape, joint compound)	Misc/ Surf	Throughout / NA	<1% Chrysotile (white compound) 2% Chrysotile[2] (joint compound) ND (gypsum board)
GWB-01-11 and GWB-01-14	Gypsum Board Wall System (gypsum board, tape, joint compound)	Misc/ Surf	Throughout / NA	<1% Chrysotile (white compound) <1% Chrysotile (joint compound) NA (gypsum board)
GWB-01-12	Gypsum Board Wall System (gypsum board, tape, joint compound)	Misc/ Surf	Throughout / NA	2% Chrysotile[2] (white compound) <1% Chrysotile (joint compound) ND (gypsum board)
ST-06-1 to ST-06-15	Wall Texture Compound (orange peel)	Surf	Throughout / NA	<1% Chrysotile

[1]Quantity estimated for asbestos-containing materials only.
[2]Composite result for the gypsum wallboard system is <1% Chrysotile.
Misc – Miscellaneous Material
Surf – Surfacing Material
SF – Square Feet
LF – Linear Feet
SU – Sink Units
ND – None Detected
NA – Not Analyzed
PACM – Presumed Asbestos Containing Material
Bold – Denotes samples containing greater than, or equal to, 1% asbestos.

Table 2
XRF Data

Sample #	Sample Date	Sample Location[1]	Component	Substrate	Color	Wall	Unit Number	XRF Reading (mg/cm2)	XRF Error (mg/cm2)
1	1/21/2010	2	WALL/MIDDLE	DRYWALL	WHITE	A	E-15	0	0.02
2	1/21/2010	2	WALL/MIDDLE	DRYWALL	WHITE	B	E-15	0	0.02
3	1/21/2010	2	WALL/MIDDLE	DRYWALL	WHITE	C	E-15	0	0.02
4	1/21/2010	2	WALL/MIDDLE	DRYWALL	WHITE	D	E-15	0	0.02
5	1/21/2010	3	WALL/MIDDLE	DRYWALL	WHITE	A	E-15	0	0.02
6	1/21/2010	3	WALL/MIDDLE	DRYWALL	WHITE	B	E-15	0	0.02
7	1/21/2010	3	WALL/MIDDLE	WOOD	VARNISH	C	E-15	0.01	0.03
8	1/21/2010	3	WALL/MIDDLE	DRYWALL	WHITE	D	E-15	0	0.02
9	1/21/2010	3	WALL/MIDDLE	DRYWALL	WHITE	E	E-15	0	0.02
10	1/21/2010	4	WALL/MIDDLE	DRYWALL	WHITE	C	E-15	0	0.02
11	1/21/2010	4	WALL/MIDDLE	DRYWALL	WHITE	A	E-15	0	0.02
12	1/21/2010	4	WALL/MIDDLE	DRYWALL	WHITE	B	E-15	0	0.02
13	1/21/2010	4	WALL/MIDDLE	DRYWALL	WHITE	D	E-15	0	0.02
14	1/21/2010	SHUTTER CAL						10.51	0
15	1/21/2010	5	WALL/MIDDLE	DRYWALL	WHITE	A	E-15	< LOD	0.03
16	1/21/2010	5	WALL/MIDDLE	DRYWALL	WHITE	B	E-15	< LOD	0.03

Table 2
XRF Data

Sample #	Sample Date	Sample Location[1]	Component	Substrate	Color	Wall	Unit Number	XRF Reading (mg/cm2)	XRF Error (mg/cm2)
17	1/21/2010	5	WALL/MIDDLE	DRYWALL	WHITE	C	E-15	< LOD	0.03
18	1/21/2010	5	CLST SHELF	WOOD	BROWN	A	E-15	< LOD	0.03
19	1/21/2010	2	CLST SHELF	WOOD	BROWN	B	E-15	< LOD	0.03
20	1/21/2010	2	BASEBOARD	WOOD	VARNISH	B	E-15	< LOD	0.03
21	1/21/2010	3	BASEBOARD	WOOD	VARNISH	C	E-15	< LOD	0.03
22	1/21/2010	3	TRIM	WOOD	VARNISH	A	E-15	< LOD	0.03
23	1/21/2010	4	CBNT FRONT	WOOD	VARNISH	C	E-15	< LOD	0.04
24	1/21/2010	3	CLST DOOR	WOOD	VARNISH	B	E-15	< LOD	0.03
25	1/21/2010	5	CLST DOOR	WOOD	VARNISH	A	E-15	< LOD	0.04
26	1/21/2010	5	CLST DR CASING	WOOD	VARNISH	A	E-15	< LOD	0.03
27	1/21/2010	3	DR. TRIM	WOOD	VARNISH	D	E-15	< LOD	0.03
28	1/21/2010	3	DOOR	METAL	WHITE	D	E-15	< LOD	0.04
29	1/21/2010	3	DOOR	METAL	WHITE	D	E-15	< LOD	0.07
30	1/21/2010	3	WNDW SILL	WOOD	VARNISH	D	E-15	< LOD	0.07
31	1/21/2010	4	WNDW SILL	WOOD	VARNISH	A	E-15	< LOD	0.07
32	1/21/2010	3	RADIATOR	METAL	GREY	C	E-15	< LOD	0.03

Table 2
XRF Data

Sample #	Sample Date	Sample Location[1]	Component	Substrate	Color	Wall	Unit Number	XRF Reading (mg/cm2)	XRF Error (mg/cm2)
33	1/21/2010	3	RADIATOR	METAL	WHITE	B	E-15	< LOD	0.03
34	1/21/2010	3	CEILING	DRYWALL	WHITE	B	E-15	< LOD	0.03
35	1/21/2010	4	CEILING	DRYWALL	WHITE	B	E-15	< LOD	0.03
36	1/21/2010	5	CEILING	DRYWALL	WHITE	B	E-15	< LOD	0.03
37	1/21/2010	SRM2574	CALIBRATE - FRONT					0.7	0.1
38	1/22/2010	SRM2572	CALIBRATE - FRONT					1.6	0.3
39	1/22/2010	1	WALL/MIDDLE	DRYWALL	WHITE	B	M-41	< LOD	0.03
40	1/22/2010	1	WALL/MIDDLE	DRYWALL	WHITE	C	M-41	< LOD	0.03
41	1/22/2010	1	WALL/MIDDLE	DRYWALL	WHITE	D	M-41	< LOD	0.13
42	1/22/2010	1	WALL/MIDDLE	DRYWALL	WHITE	E	M-41	< LOD	0.03
43	1/22/2010	2	WALL/MIDDLE	WOOD	VARNISH	A	M-41	< LOD	0.08
44	1/22/2010	2	WALL/MIDDLE	DRYWALL	WHITE	B	M-41	< LOD	0.03
45	1/22/2010	2	WALL/MIDDLE	DRYWALL	WHITE	C	M-41	< LOD	0.03
46	1/22/2010	2	WALL/MIDDLE	DRYWALL	WHITE	D	M-41	< LOD	0.03
47	1/22/2010	3	WALL/MIDDLE	DRYWALL	WHITE	D	M-41	< LOD	0.03
48	1/22/2010	3	WALL/MIDDLE	DRYWALL	WHITE	C	M-41	< LOD	0.03

Table 2
XRF Data

Sample #	Sample Date	Sample Location[1]	Component	Substrate	Color	Wall	Unit Number	XRF Reading (mg/cm2)	XRF Error (mg/cm2)
49	1/22/2010	3	WALL/MIDDLE	DRYWALL	WHITE	B	M-41	< LOD	0.03
50	1/22/2010	3	WALL/MIDDLE	DRYWALL	WHITE	A	M-41	< LOD	0.03
51	1/22/2010	4	WALL/MIDDLE	DRYWALL	WHITE	A	M-41	< LOD	0.03
52	1/22/2010	4	WALL/MIDDLE	DRYWALL	WHITE	B	M-41	< LOD	0.03
53	1/22/2010	4	WALL/MIDDLE	DRYWALL	WHITE	C	M-41	< LOD	0.03
54	1/22/2010	4	WALL/MIDDLE	DRYWALL	WHITE	D	M-41	< LOD	0.03
55	1/22/2010	5	WALL/MIDDLE	DRYWALL	WHITE	D	M-41	< LOD	0.03
56	1/22/2010	5	WALL/MIDDLE	DRYWALL	WHITE	B	M-41	< LOD	0.03
57	1/22/2010	5	WALL/MIDDLE	DRYWALL	WHITE	A	M-41	< LOD	0.03
58	1/22/2010	6	WALL/MIDDLE	DRYWALL	WHITE	A	M-41	< LOD	0.03
59	1/22/2010	6	WALL/MIDDLE	DRYWALL	WHITE	B	M-41	< LOD	0.03
60	1/22/2010	6	WALL/MIDDLE	DRYWALL	WHITE	C	M-41	< LOD	0.03
61	1/22/2010	6	WALL/MIDDLE	DRYWALL	WHITE	D	M-41	< LOD	0.03
62	1/22/2010	7	WALL/MIDDLE	DRYWALL	WHITE	D	M-41	< LOD	0.03
63	1/22/2010	7	WALL/MIDDLE	DRYWALL	WHITE	C	M-41	< LOD	0.03
64	1/22/2010	7	WALL/MIDDLE	DRYWALL	WHITE	B	M-41	< LOD	0.03

Table 2
XRF Data

Sample #	Sample Date	Sample Location[1]	Component	Substrate	Color	Wall	Unit Number	XRF Reading (mg/cm2)	XRF Error (mg/cm2)
65	1/22/2010	7	WALL/MIDDLE	DRYWALL	WHITE	A	M-41	< LOD	0.03
66	1/22/2010	8	WALL/MIDDLE	DRYWALL	WHITE	A	M-41	< LOD	0.03
67	1/22/2010	8	WALL/MIDDLE	DRYWALL	WHITE	B	M-41	< LOD	0.03
68	1/22/2010	8	WALL/MIDDLE	DRYWALL	WHITE	C	M-41	< LOD	0.03
69	1/22/2010	8	WALL/MIDDLE	DRYWALL	WHITE	D	M-41	< LOD	0.03
70	1/22/2010	9	WALL/MIDDLE	DRYWALL	WHITE	D	M-41	< LOD	0.03
71	1/22/2010	9	WALL/MIDDLE	DRYWALL	WHITE	C	M-41	< LOD	0.03
72	1/22/2010	9	WALL/MIDDLE	DRYWALL	WHITE	B	M-41	< LOD	0.06
73	1/22/2010	9	WALL/MIDDLE	DRYWALL	WHITE	A	M-41	< LOD	0.09
74	1/22/2010	9	CEILING	DRYWALL	WHITE		M-41	< LOD	0.03
75	1/22/2010	8	CEILING	DRYWALL	WHITE		M-41	< LOD	0.03
76	1/22/2010	7	CEILING	DRYWALL	WHITE		M-41	< LOD	0.03
77	1/22/2010	6	CEILING	DRYWALL	WHITE		M-41	< LOD	0.08
78	1/22/2010	5	CEILING	DRYWALL	WHITE		M-41	< LOD	0.08
79	1/22/2010	4	CEILING	DRYWALL	WHITE		M-41	< LOD	0.03
80	1/22/2010	3	CEILING	DRYWALL	WHITE		M-41	< LOD	0.03

Table 2
XRF Data

Sample #	Sample Date	Sample Location[1]	Component	Substrate	Color	Wall	Unit Number	XRF Reading (mg/cm2)	XRF Error (mg/cm2)
81	1/22/2010	2	CEILING	DRYWALL	WHITE		M-41	< LOD	0.03
82	1/22/2010	1	CEILING	DRYWALL	WHITE		M-41	< LOD	0.03
83	1/22/2010	1	CLST SHELF	WOOD	VARNISH	E	M-41	< LOD	0.03
84	1/22/2010	3	CLST SHELF	WOOD	VARNISH	D	M-41	< LOD	0.03
85	1/22/2010	SHUTTER CAL						10.55	0
86	1/22/2010	7	CLST SHELF	WOOD	VARNISH	B	M-41	< LOD	0.03
87	1/22/2010	8	CLST SHELF	WOOD	VARNISH	B	M-41	< LOD	0.03
88	1/22/2010	9	CLST SHELF	WOOD	VARNISH	B	M-41	< LOD	0.03
89	1/22/2010	9	CLST DOOR	WOOD	VARNISH	B	M-41	< LOD	0.03
90	1/22/2010	8	CLST DOOR	WOOD	VARNISH	B	M-41	< LOD	0.03
91	1/22/2010	7	CLST DOOR	WOOD	VARNISH	B	M-41	< LOD	0.03
92	1/22/2010	3	CLST DOOR	WOOD	VARNISH	D	M-41	< LOD	0.03
93	1/22/2010	1	CLST DOOR	WOOD	VARNISH	E	M-41	< LOD	0.03
94	1/22/2010	1	BASEBOARD	WOOD	VARNISH	E	M-41	< LOD	0.03
95	1/22/2010	2	BASEBOARD	WOOD	VARNISH	A	M-41	< LOD	0.03
96	1/22/2010	6	BASEBOARD	WOOD	VARNISH	B	M-41	< LOD	0.03

Table 2
XRF Data

Sample #	Sample Date	Sample Location[1]	Component	Substrate	Color	Wall	Unit Number	XRF Reading (mg/cm2)	XRF Error (mg/cm2)
97	1/22/2010	7	BASEBOARD	WOOD	VARNISH	B	M-41	< LOD	0.03
98	1/22/2010	8	BASEBOARD	WOOD	VARNISH	A	M-41	< LOD	0.03
99	1/22/2010	9	BASEBOARD	WOOD	VARNISH	C	M-41	< LOD	0.05
100	1/22/2010	1	DR. CASING LF	WOOD	VARNISH	B	M-41	< LOD	0.03
101	1/22/2010	1	DR. TRIM	WOOD	VARNISH	C	M-41	< LOD	0.07
102	1/22/2010	1	DOOR	WOOD	VARNISH	D	M-41	< LOD	0.03
103	1/22/2010	1	DOOR	METAL	WHITE	A	M-41	< LOD	0.08
104	1/22/2010	2	DOOR	METAL	WHITE	B	M-41	< LOD	0.03
105	1/22/2010	5	DOOR	WOOD	VARNISH	A	M-41	< LOD	0.03
106	1/22/2010	5	DR. TRIM	WOOD	VARNISH	A	M-41	< LOD	0.03
107	1/22/2010	7	DR. TRIM	WOOD	VARNISH	A	M-41	< LOD	0.03
108	1/22/2010	7	DOOR	WOOD	VARNISH	B	M-41	< LOD	0.03
109	1/22/2010	7	WNDW TRIM	WOOD	VARNISH	D	M-41	< LOD	0.03
110	1/22/2010	8	WNDW TRIM	WOOD	VARNISH	D	M-41	< LOD	0.03
111	1/22/2010	9	WNDW TRIM	WOOD	VARNISH	D	M-41	< LOD	0.03
112	1/22/2010	2	WNDW TRIM	WOOD	VARNISH	B	M-41	< LOD	0.03

Table 2
XRF Data

Sample #	Sample Date	Sample Location[1]	Component	Substrate	Color	Wall	Unit Number	XRF Reading (mg/cm2)	XRF Error (mg/cm2)
113	1/22/2010	3	WNDW TRIM	WOOD	VARNISH	B	M-41	< LOD	0.03
114	1/22/2010	3	CLST SHELF	WOOD	WHITE	D	M-41	< LOD	0.03
115	1/22/2010	3	CBNT FRONT	WOOD	VARNISH	B	M-41	< LOD	0.03
116	1/22/2010	4	CBNT FRONT	WOOD	VARNISH	B	M-41	< LOD	0.03
117	1/22/2010	1	RADIATOR	METAL	WHITE	E	M-41	< LOD	0.03
118	1/22/2010	2	RADIATOR	METAL	GREY	B	M-41	< LOD	0.03
119	1/22/2010	7	RADIATOR	METAL	GREY	D	M-41	< LOD	0.03
120	1/22/2010	8	RADIATOR	METAL	GREY	D	M-41	< LOD	0.03
121	1/22/2010	9	RADIATOR	METAL	GREY	D	M-41	< LOD	0.03
122	1/22/2010	PORCH REAR	DOOR	METAL	PURPLE	C	M-41	< LOD	0.22
123	1/22/2010	PORCH REAR	DOOR	WOOD	GREY	C	M-41	< LOD	0.03
124	1/22/2010	PORCH REAR	DR. TRIM	WOOD	WHITE	C	M-41	< LOD	0.03
125	1/22/2010	PORCH REAR	WNDW TRIM	WOOD	WHITE	D	M-41	< LOD	0.03
126	1/22/2010	PORCH REAR	PORCH SUP COLUMN	WOOD	WHITE		M-41	< LOD	0.03
127	1/22/2010	PORCH REAR	PORCH SIDING	WOOD	GREY	A	M-41	< LOD	0.03
128	1/22/2010	PORCH REAR	PORCH SIDING	WOOD	GREY	C	M-41	< LOD	0.03

Table 2
XRF Data

Sample #	Sample Date	Sample Location[1]	Component	Substrate	Color	Wall	Unit Number	XRF Reading (mg/cm2)	XRF Error (mg/cm2)
129	1/22/2010	PORCH REAR	PORCH SIDING	WOOD	GREY	D	M-41	< LOD	0.03
130	1/22/2010	PORCH REAR	PORCH CEILING	WOOD	GREY	D	M-41	< LOD	0.03
131	1/22/2010	SRM2573	CALIBRATE - FRONT					1.1	0.1
132	1/22/2010	1	WALL/MIDDLE	DRYWALL	WHITE	B	M-42	0	0.02
133	1/22/2010	1	WALL/MIDDLE	DRYWALL	WHITE	C	M-42	0	0.02
134	1/22/2010	1	WALL/MIDDLE	DRYWALL	WHITE	D	M-42	0	0.02
135	1/22/2010	1	WALL/MIDDLE	DRYWALL	WHITE	E	M-42	0	0.02
136	1/22/2010	SHUTTER CAL						9.9	0
137	1/22/2010	2	WALL/MIDDLE	BURLAP	WHITE	A	M-42	< LOD	0.16
138	1/22/2010	2	WALL/MIDDLE	DRYWALL	WHITE	B	M-42	< LOD	0.03
139	1/22/2010	2	WALL/MIDDLE	DRYWALL	WHITE	C	M-42	< LOD	0.03
140	1/22/2010	2	WALL/MIDDLE	DRYWALL	WHITE	D	M-42	< LOD	0.03
141	1/22/2010	3	WALL/MIDDLE	DRYWALL	WHITE	D	M-42	< LOD	0.03
142	1/22/2010	3	WALL/MIDDLE	DRYWALL	WHITE	C	M-42	< LOD	0.03
143	1/22/2010	3	WALL/MIDDLE	DRYWALL	WHITE	B	M-42	< LOD	0.03
144	1/22/2010	3	WALL/MIDDLE	DRYWALL	WHITE	A	M-42	< LOD	0.03

Table 2
XRF Data

Sample #	Sample Date	Sample Location[1]	Component	Substrate	Color	Wall	Unit Number	XRF Reading (mg/cm2)	XRF Error (mg/cm2)
145	1/22/2010	4	WALL/MIDDLE	DRYWALL	WHITE	A	M-42	< LOD	0.03
146	1/22/2010	4	WALL/MIDDLE	DRYWALL	WHITE	B	M-42	< LOD	0.03
147	1/22/2010	4	WALL/MIDDLE	DRYWALL	WHITE	C	M-42	< LOD	0.03
148	1/22/2010	4	WALL/MIDDLE	DRYWALL	WHITE	D	M-42	< LOD	0.03
149	1/22/2010	5	WALL/MIDDLE	DRYWALL	WHITE	D	M-42	< LOD	0.03
150	1/22/2010	5	WALL/MIDDLE	DRYWALL	WHITE	B	M-42	< LOD	0.03
151	1/22/2010	5	WALL/MIDDLE	DRYWALL	WHITE	A	M-42	< LOD	0.03
152	1/22/2010	6	WALL/MIDDLE	DRYWALL	WHITE	A	M-42	< LOD	0.03
153	1/22/2010	6	WALL/MIDDLE	DRYWALL	WHITE	B	M-42	< LOD	0.03
154	1/22/2010	6	WALL/MIDDLE	DRYWALL	WHITE	C	M-42	< LOD	0.03
155	1/22/2010	6	WALL/MIDDLE	DRYWALL	WHITE	D	M-42	< LOD	0.03
156	1/22/2010	7	WALL/MIDDLE	DRYWALL	WHITE	D	M-42	< LOD	0.03
157	1/22/2010	7	WALL/MIDDLE	DRYWALL	WHITE	C	M-42	< LOD	0.03
158	1/22/2010	7	WALL/MIDDLE	DRYWALL	WHITE	B	M-42	< LOD	0.03
159	1/22/2010	7	WALL/MIDDLE	DRYWALL	WHITE	A	M-42	< LOD	0.03
160	1/22/2010	8	WALL/MIDDLE	DRYWALL	WHITE	A	M-42	< LOD	0.03

Table 2
XRF Data

Sample #	Sample Date	Sample Location[1]	Component	Substrate	Color	Wall	Unit Number	XRF Reading (mg/cm2)	XRF Error (mg/cm2)
161	1/22/2010	8	WALL/MIDDLE	DRYWALL	WHITE	B	M-42	< LOD	0.03
162	1/22/2010	8	WALL/MIDDLE	DRYWALL	WHITE	C	M-42	< LOD	0.03
163	1/22/2010	8	WALL/MIDDLE	DRYWALL	WHITE	D	M-42	< LOD	0.03
164	1/22/2010	9	WALL/MIDDLE	DRYWALL	WHITE	A	M-42	< LOD	0.03
165	1/22/2010	9	WALL/MIDDLE	DRYWALL	WHITE	B	M-42	< LOD	0.03
166	1/22/2010	9	WALL/MIDDLE	DRYWALL	WHITE	C	M-42	< LOD	0.03
167	1/22/2010	9	WALL/MIDDLE	DRYWALL	WHITE	D	M-42	< LOD	0.03
168	1/22/2010	9	CEILING	DRYWALL	WHITE		M-42	< LOD	0.03
169	1/22/2010	8	CEILING	DRYWALL	WHITE		M-42	< LOD	0.03
170	1/22/2010	7	CEILING	DRYWALL	WHITE		M-42	< LOD	0.03
171	1/22/2010	6	CEILING	DRYWALL	WHITE		M-42	< LOD	0.05
172	1/22/2010	5	CEILING	DRYWALL	WHITE		M-42	< LOD	0.03
173	1/22/2010	4	CEILING	DRYWALL	WHITE		M-42	< LOD	0.03
174	1/22/2010	3	CEILING	DRYWALL	WHITE		M-42	< LOD	0.03
175	1/22/2010	2	CEILING	DRYWALL	WHITE		M-42	< LOD	0.03
176	1/22/2010	1	CEILING	DRYWALL	WHITE		M-42	< LOD	0.03

Table 2
XRF Data

Sample #	Sample Date	Sample Location[1]	Component	Substrate	Color	Wall	Unit Number	XRF Reading (mg/cm2)	XRF Error (mg/cm2)
177	1/22/2010	1	CLST SHELF	WOOD	VARNISH	E	M-42	< LOD	0.03
178	1/22/2010	3	CLST SHELF	WOOD	VARNISH	D	M-42	< LOD	0.03
179	1/22/2010	7	CLST SHELF	WOOD	VARNISH	B	M-42	< LOD	0.03
180	1/22/2010	8	CLST SHELF	WOOD	VARNISH	B	M-42	< LOD	0.03
181	1/22/2010	9	CLST SHELF	WOOD	VARNISH	B	M-42	< LOD	0.03
182	1/22/2010	9	BASEBOARD	WOOD	VARNISH	B	M-42	< LOD	0.03
183	1/22/2010	8	BASEBOARD	WOOD	VARNISH	A	M-42	< LOD	0.03
184	1/22/2010	7	BASEBOARD	WOOD	VARNISH	A	M-42	< LOD	0.03
185	1/22/2010	6	BASEBOARD	WOOD	VARNISH	B	M-42	< LOD	0.03
186	1/22/2010	2	BASEBOARD	WOOD	VARNISH	B	M-42	< LOD	0.03
187	1/22/2010	1	BASEBOARD	WOOD	VARNISH	E	M-42	< LOD	0.03
188	1/22/2010	1	CLST DOOR	WOOD	VARNISH	E	M-42	< LOD	0.03
189	1/22/2010	SHUTTER CAL						9.21	0
190	1/22/2010	3	CLST DOOR	WOOD	VARNISH	D	M-42	< LOD	0.03
191	1/22/2010	7	CLST DOOR	WOOD	VARNISH	B	M-42	< LOD	0.03
192	1/22/2010	8	CLST DOOR	WOOD	VARNISH	B	M-42	< LOD	0.03

Table 2
XRF Data

Sample #	Sample Date	Sample Location[1]	Component	Substrate	Color	Wall	Unit Number	XRF Reading (mg/cm2)	XRF Error (mg/cm2)
193	1/22/2010	9	CLST DOOR	WOOD	VARNISH	B	M-42	< LOD	0.03
194	1/22/2010	1	DR. TRIM	WOOD	VARNISH	A	M-42	< LOD	0.03
195	1/22/2010	1	DR. CASING LF	WOOD	VARNISH	B	M-42	< LOD	0.03
196	1/22/2010	1	DR. TRIM	WOOD	VARNISH	D	M-42	< LOD	0.03
197	1/22/2010	5	DR. TRIM	WOOD	VARNISH	A	M-42	< LOD	0.03
198	1/22/2010	7	DR. TRIM	WOOD	VARNISH	A	M-42	< LOD	0.03
199	1/22/2010	7	ELEC BOX MOUNT	WOOD	VARNISH	B	M-42	< LOD	0.03
200	1/22/2010	7	DR. TRIM	WOOD	VARNISH	B	M-42	< LOD	0.03
201	1/22/2010	7	DOOR	WOOD	VARNISH	A	M-42	< LOD	0.03
202	1/22/2010	1	DOOR	WOOD	VARNISH	C	M-42	< LOD	0.03
203	1/22/2010	1	DOOR	METAL	WHITE	A	M-42	< LOD	0.14
204	1/22/2010	2	DOOR	METAL	WHITE	B	M-42	< LOD	0.13
205	1/22/2010	2	DR. TRIM	WOOD	VARNISH	B	M-42	< LOD	0.03
206	1/22/2010	2	WNDW TRIM	WOOD	VARNISH	B	M-42	< LOD	0.03
207	1/22/2010	7	WNDW TRIM	WOOD	VARNISH	D	M-42	< LOD	0.03
208	1/22/2010	8	WNDW TRIM	WOOD	VARNISH	D	M-42	< LOD	0.03

Table 2
XRF Data

Sample #	Sample Date	Sample Location[1]	Component	Substrate	Color	Wall	Unit Number	XRF Reading (mg/cm2)	XRF Error (mg/cm2)
209	1/22/2010	9	WNDW TRIM	WOOD	VARNISH	D	M-42	< LOD	0.03
210	1/22/2010	3	WNDW TRIM	WOOD	VARNISH	B	M-42	< LOD	0.03
211	1/22/2010	2	RADIATOR	METAL	GREY	B	M-42	< LOD	0.03
212	1/22/2010	1	RADIATOR	METAL	WHITE	E	M-42	< LOD	0.03
213	1/22/2010	7	RADIATOR	METAL	GREY	D	M-42	< LOD	0.03
214	1/22/2010	8	RADIATOR	METAL	GREY	D	M-42	< LOD	0.03
215	1/22/2010	9	RADIATOR	METAL	GREY	D	M-42	< LOD	0.03
216	1/22/2010	PORCH REAR	PORCH RAIL CAP	WOOD	GREY	B	M-42	< LOD	0.03
217	1/22/2010	PORCH REAR	PORCH BALUSTER	WOOD	GREY	B	M-42	< LOD	0.03
218	1/22/2010	PORCH REAR	PORCH SIDING	WOOD	GREY	A	M-42	< LOD	0.03
219	1/22/2010	PORCH REAR	PORCH SIDING	WOOD	GREY	C	M-42	< LOD	0.03
220	1/22/2010	PORCH REAR	PORCH SIDING	WOOD	GREY	D	M-42	< LOD	0.03
221	1/22/2010	PORCH REAR	DOOR	METAL	PURPLE	D	M-42	< LOD	0.03
222	1/22/2010	PORCH REAR	DOOR	WOOD	GREY	C	M-42	< LOD	0.03
223	1/22/2010	PORCH REAR	DR. TRIM	WOOD	WHITE	C	M-42	< LOD	0.03
224	1/22/2010	PORCH REAR	WNDW TRIM	WOOD	WHITE	D	M-42	< LOD	0.03

Table 2
XRF Data

Sample #	Sample Date	Sample Location[1]	Component	Substrate	Color	Wall	Unit Number	XRF Reading (mg/cm2)	XRF Error (mg/cm2)
225	1/22/2010	PORCH REAR	PORCH CEILING	WOOD	GREY		M-42	< LOD	0.03
226	1/22/2010	PORCH REAR	EXT. GUTTERS	METAL	WHITE		M-42	< LOD	0.03
227	1/22/2010	SRM2574	CALIBRATE - FRONT					0.8	0.1
228	1/22/2010	SHUTTER CAL						10.57	0
229	1/22/2010	SRM2575	CALIBRATE - FRONT					0.3	0.06
230	1/22/2010	1	WALL/MIDDLE	DRYWALL	WHITE	B	P-49	< LOD	0.04
231	1/22/2010	1	WALL/MIDDLE	DRYWALL	WHITE	C	P-49	< LOD	0.09
232	1/22/2010	1	WALL/MIDDLE	DRYWALL	WHITE	D	P-49	< LOD	0.06
233	1/22/2010	1	WALL/MIDDLE	DRYWALL	WHITE	E	P-49	< LOD	0.05
234	1/22/2010	2	WALL/MIDDLE	BURLAP	WHITE	A	P-49	< LOD	0.04
235	1/22/2010	2	WALL/MIDDLE	DRYWALL	WHITE	B	P-49	< LOD	0.03
236	1/22/2010	2	WALL/MIDDLE	DRYWALL	WHITE	C	P-49	< LOD	0.03
237	1/22/2010	2	WALL/MIDDLE	DRYWALL	WHITE	D	P-49	< LOD	0.03
238	1/22/2010	3	WALL/MIDDLE	DRYWALL	WHITE	D	P-49	< LOD	0.03
239	1/22/2010	3	WALL/MIDDLE	DRYWALL	WHITE	C	P-49	< LOD	0.03
240	1/22/2010	3	WALL/MIDDLE	DRYWALL	WHITE	B	P-49	< LOD	0.05

Table 2
XRF Data

Sample #	Sample Date	Sample Location[1]	Component	Substrate	Color	Wall	Unit Number	XRF Reading (mg/cm2)	XRF Error (mg/cm2)
241	1/22/2010	3	WALL/MIDDLE	DRYWALL	WHITE	A	P-49	< LOD	0.04
242	1/22/2010	4	WALL/MIDDLE	DRYWALL	WHITE	A	P-49	< LOD	0.14
243	1/22/2010	4	WALL/MIDDLE	DRYWALL	WHITE	B	P-49	< LOD	0.05
244	1/22/2010	4	WALL/MIDDLE	DRYWALL	WHITE	C	P-49	< LOD	0.03
245	1/22/2010	4	WALL/MIDDLE	DRYWALL	WHITE	D	P-49	< LOD	0.03
246	1/22/2010	5	WALL/MIDDLE	DRYWALL	WHITE	D	P-49	< LOD	0.03
247	1/22/2010	5	WALL/MIDDLE	DRYWALL	WHITE	B	P-49	< LOD	0.03
248	1/22/2010	5	WALL/MIDDLE	DRYWALL	WHITE	A	P-49	< LOD	0.03
249	1/22/2010	6	WALL/MIDDLE	DRYWALL	WHITE	A	P-49	< LOD	0.03
250	1/22/2010	6	WALL/MIDDLE	DRYWALL	WHITE	B	P-49	< LOD	0.05
251	1/22/2010	6	WALL/MIDDLE	DRYWALL	WHITE	C	P-49	< LOD	0.04
252	1/22/2010	6	WALL/MIDDLE	DRYWALL	WHITE	D	P-49	< LOD	0.07
253	1/22/2010	7	WALL/MIDDLE	DRYWALL	WHITE	D	P-49	< LOD	0.03
254	1/22/2010	7	WALL/MIDDLE	DRYWALL	WHITE	C	P-49	< LOD	0.03
255	1/22/2010	7	WALL/MIDDLE	DRYWALL	WHITE	B	P-49	< LOD	0.07
256	1/22/2010	7	WALL/MIDDLE	DRYWALL	WHITE	A	P-49	< LOD	0.05

Table 2
XRF Data

Sample #	Sample Date	Sample Location[1]	Component	Substrate	Color	Wall	Unit Number	XRF Reading (mg/cm2)	XRF Error (mg/cm2)
257	1/22/2010	8	WALL/MIDDLE	DRYWALL	WHITE	A	P-49	< LOD	0.03
258	1/22/2010	8	WALL/MIDDLE	DRYWALL	WHITE	B	P-49	< LOD	0.03
259	1/22/2010	8	WALL/MIDDLE	DRYWALL	WHITE	C	P-49	< LOD	0.03
260	1/22/2010	8	WALL/MIDDLE	DRYWALL	WHITE	D	P-49	< LOD	0.03
261	1/22/2010	9	WALL/MIDDLE	DRYWALL	WHITE	D	P-49	< LOD	0.03
262	1/22/2010	9	WALL/MIDDLE	DRYWALL	WHITE	C	P-49	< LOD	0.03
263	1/22/2010	9	WALL/MIDDLE	DRYWALL	WHITE	B	P-49	< LOD	0.03
264	1/22/2010	9	WALL/MIDDLE	DRYWALL	WHITE	A	P-49	< LOD	0.04
265	1/22/2010	9	CEILING	DRYWALL	WHITE		P-49	< LOD	0.03
266	1/22/2010	8	CEILING	DRYWALL	WHITE		P-49	< LOD	0.05
267	1/22/2010	7	CEILING	DRYWALL	WHITE		P-49	< LOD	0.03
268	1/22/2010	6	CEILING	DRYWALL	WHITE		P-49	< LOD	0.04
269	1/22/2010	5	CEILING	DRYWALL	WHITE		P-49	< LOD	0.03
270	1/22/2010	4	CEILING	DRYWALL	WHITE		P-49	< LOD	0.08
271	1/22/2010	3	CEILING	DRYWALL	WHITE		P-49	< LOD	0.03
272	1/22/2010	2	CEILING	DRYWALL	WHITE		P-49	< LOD	0.07

Table 2
XRF Data

Sample #	Sample Date	Sample Location[1]	Component	Substrate	Color	Wall	Unit Number	XRF Reading (mg/cm2)	XRF Error (mg/cm2)
273	1/22/2010	1	CEILING	DRYWALL	WHITE		P-49	< LOD	0.03
274	1/22/2010	1	CLST SHELF	WOOD	VARNISH	E	P-49	< LOD	0.03
275	1/22/2010	3	CLST SHELF	WOOD	VARNISH	D	P-49	< LOD	0.03
276	1/22/2010	7	CLST SHELF	WOOD	VARNISH	B	P-49	< LOD	0.03
277	1/22/2010	7	CLST SHELF	WOOD	BROWN	B	P-49	< LOD	0.03
278	1/22/2010	SHUTTER CAL						10.32	0
279	1/22/2010	8	CLST SHELF	WOOD	BROWN	B	P-49	< LOD	0.03
280	1/22/2010	9	CLST SHELF	WOOD	BROWN	B	P-49	< LOD	0.03
281	1/22/2010	9	CLST DOOR	WOOD	VARNISH	B	P-49	< LOD	0.03
282	1/22/2010	8	CLST DOOR	WOOD	VARNISH	B	P-49	< LOD	0.03
283	1/22/2010	7	CLST DOOR	WOOD	VARNISH	B	P-49	< LOD	0.03
284	1/22/2010	3	CLST DOOR	WOOD	VARNISH	D	P-49	< LOD	0.03
285	1/22/2010	1	CLST DOOR	WOOD	VARNISH	E	P-49	< LOD	0.03
286	1/22/2010	1	BASEBOARD	WOOD	VARNISH	E	P-49	< LOD	0.03
287	1/22/2010	2	BASEBOARD	WOOD	VARNISH	C	P-49	< LOD	0.03
288	1/22/2010	6	BASEBOARD	WOOD	VARNISH	B	P-49	< LOD	0.03

Table 2
XRF Data

Sample #	Sample Date	Sample Location[1]	Component	Substrate	Color	Wall	Unit Number	XRF Reading (mg/cm2)	XRF Error (mg/cm2)
289	1/22/2010	7	BASEBOARD	WOOD	VARNISH	B	P-49	< LOD	0.03
290	1/22/2010	8	BASEBOARD	WOOD	VARNISH	A	P-49	< LOD	0.03
291	1/22/2010	9	BASEBOARD	WOOD	VARNISH	D	P-49	< LOD	0.03
292	1/22/2010	4	CBNT FRONT	WOOD	VARNISH	B	P-49	< LOD	0.03
293	1/22/2010	3	CBNT FRONT	WOOD	VARNISH	B	P-49	< LOD	0.03
294	1/22/2010	1	DR. TRIM	WOOD	VARNISH	A	P-49	< LOD	0.03
295	1/22/2010	1	DR. CASING LF	WOOD	VARNISH	B	P-49	< LOD	0.03
296	1/22/2010	1	DOOR	WOOD	VARNISH	C	P-49	< LOD	0.03
297	1/22/2010	2	DOOR	METAL	WHITE	B	P-49	< LOD	0.03
298	1/22/2010	2	DR. TRIM	WOOD	VARNISH	B	P-49	< LOD	0.03
299	1/22/2010	5	DR. TRIM	WOOD	VARNISH	A	P-49	< LOD	0.03
300	1/22/2010	5	DOOR	WOOD	VARNISH	A	P-49	< LOD	0.03
301	1/22/2010	7	DOOR	WOOD	VARNISH	A	P-49	< LOD	0.03
302	1/22/2010	7	DR. TRIM	WOOD	VARNISH	B	P-49	< LOD	0.08
303	1/22/2010	7	DR. CASING LF	WOOD	VARNISH	A	P-49	< LOD	0.03
304	1/22/2010	7	WNDW TRIM	WOOD	VARNISH	D	P-49	< LOD	0.03

Table 2
XRF Data

Sample #	Sample Date	Sample Location[1]	Component	Substrate	Color	Wall	Unit Number	XRF Reading (mg/cm2)	XRF Error (mg/cm2)
305	1/22/2010	8	WNDW TRIM	WOOD	VARNISH	D	P-49	< LOD	0.03
306	1/22/2010	9	WNDW TRIM	WOOD	VARNISH	D	P-49	< LOD	0.03
307	1/22/2010	2	WNDW TRIM	WOOD	VARNISH	B	P-49	< LOD	0.03
308	1/22/2010	3	WNDW TRIM	WOOD	VARNISH	B	P-49	< LOD	0.03
309	1/22/2010	1	RADIATOR	METAL	GREY	E	P-49	< LOD	0.03
310	1/22/2010	2	RADIATOR	METAL	GREY	B	P-49	< LOD	0.03
311	1/22/2010	7	RADIATOR	METAL	GREY	D	P-49	< LOD	0.03
312	1/22/2010	8	RADIATOR	METAL	GREY	D	P-49	< LOD	0.03
313	1/22/2010	9	RADIATOR	METAL	GREY	D	P-49	< LOD	0.03
314	1/22/2010	PORCH REAR	PORCH SIDING	WOOD	GREY	A	P-49	< LOD	0.06
315	1/22/2010	PORCH REAR	PORCH SIDING	WOOD	GREY	C	P-49	< LOD	0.03
316	1/22/2010	PORCH REAR	PORCH SIDING	WOOD	GREY	D	P-49	< LOD	0.03
317	1/22/2010	PORCH REAR	PORCH SUP COLUMN	WOOD	WHITE		P-49	< LOD	0.03
318	1/22/2010	PORCH REAR	PORCH CEILING	WOOD	GREY		P-49	< LOD	0.03
319	1/22/2010	PORCH REAR	DOOR	WOOD	GREY	C	P-49	< LOD	0.03
320	1/22/2010	PORCH REAR	DOOR	METAL	PURPLE	D	P-49	< LOD	0.07

Table 2
XRF Data

Sample #	Sample Date	Sample Location[1]	Component	Substrate	Color	Wall	Unit Number	XRF Reading (mg/cm2)	XRF Error (mg/cm2)
321	1/22/2010	PORCH REAR	DR. TRIM	WOOD	WHITE	D	P-49	< LOD	0.05
322	1/22/2010	PORCH REAR	WNDW TRIM	WOOD	WHITE	D	P-49	< LOD	0.03
323	1/22/2010	SRM2571	CALIBRATE - FRONT					3.9	0.3
324	1/22/2010	2	WALL/MIDDLE	DRYWALL	WHITE	A	L-37	0.01	0.03
325	1/22/2010	2	WALL/MIDDLE	DRYWALL	WHITE	B	L-37	0	0.02
326	1/22/2010	2	WALL/MIDDLE	DRYWALL	WHITE	C	L-37	0	0.02
327	1/22/2010	2	WALL/MIDDLE	DRYWALL	WHITE	D	L-37	0	0.02
328	1/22/2010	SHUTTER CAL						9	0
329	1/22/2010	3	WALL/MIDDLE	DRYWALL	WHITE	A	L-37	< LOD	0.03
330	1/22/2010	3	WALL/MIDDLE	DRYWALL	WHITE	B	L-37	< LOD	0.03
331	1/22/2010	3	WALL/MIDDLE	BURLAP	WHITE	C	L-37	< LOD	0.11
332	1/22/2010	3	WALL/MIDDLE	DRYWALL	WHITE	D	L-37	< LOD	0.03
333	1/22/2010	3	WALL/MIDDLE	DRYWALL	WHITE	E	L-37	< LOD	0.03
334	1/22/2010	4	WALL/MIDDLE	DRYWALL	WHITE	A	L-37	< LOD	0.03
335	1/22/2010	4	WALL/MIDDLE	DRYWALL	WHITE	B	L-37	< LOD	0.03
336	1/22/2010	4	WALL/MIDDLE	DRYWALL	WHITE	C	L-37	< LOD	0.03

Table 2
XRF Data

Sample #	Sample Date	Sample Location[1]	Component	Substrate	Color	Wall	Unit Number	XRF Reading (mg/cm2)	XRF Error (mg/cm2)
337	1/22/2010	4	WALL/MIDDLE	DRYWALL	WHITE	D	L-37	< LOD	0.03
338	1/22/2010	5	WALL/MIDDLE	DRYWALL	WHITE	A	L-37	< LOD	0.03
339	1/22/2010	5	WALL/MIDDLE	DRYWALL	WHITE	B	L-37	< LOD	0.04
340	1/22/2010	5	WALL/MIDDLE	DRYWALL	WHITE	C	L-37	< LOD	0.03
341	1/22/2010	5	CEILING	DRYWALL	WHITE		L-37	< LOD	0.03
342	1/22/2010	4	CEILING	DRYWALL	WHITE		L-37	< LOD	0.03
343	1/22/2010	3	CEILING	DRYWALL	WHITE		L-37	< LOD	0.03
344	1/22/2010	2	CEILING	DRYWALL	WHITE		L-37	< LOD	0.03
345	1/22/2010	2	CLST SHELF	WOOD	BROWN	B	L-37	< LOD	0.03
346	1/22/2010	5	CLST SHELF	WOOD	BROWN	B	L-37	< LOD	0.03
347	1/22/2010	5	BASEBOARD	WOOD	VARNISH	B	L-37	< LOD	0.03
348	1/22/2010	3	BASEBOARD	WOOD	VARNISH	E	L-37	< LOD	0.03
349	1/22/2010	2	BASEBOARD	WOOD	VARNISH	B	L-37	< LOD	0.03
350	1/22/2010	4	CBNT FRONT	WOOD	VARNISH	A	L-37	< LOD	0.03
351	1/22/2010	4	TRIM	WOOD	VARNISH	C	L-37	< LOD	0.03
352	1/22/2010	3	CLST DOOR	WOOD	VARNISH	B	L-37	< LOD	0.03

Table 2
XRF Data

Sample #	Sample Date	Sample Location[1]	Component	Substrate	Color	Wall	Unit Number	XRF Reading (mg/cm2)	XRF Error (mg/cm2)
353	1/22/2010	5	CLST DOOR	WOOD	VARNISH	A	L-37	< LOD	0.03
354	1/22/2010	5	DR. TRIM	WOOD	VARNISH	A	L-37	< LOD	0.1
355	1/22/2010	3	DR. TRIM	WOOD	VARNISH	D	L-37	< LOD	0.03
356	1/22/2010	3	DOOR	GLASS	WHITE	D	L-37	< LOD	0.03
357	1/22/2010	3	WNDW TRIM	WOOD	VARNISH	D	L-37	< LOD	0.03
358	1/22/2010	4	WNDW TRIM	WOOD	VARNISH	A	L-37	< LOD	0.03
359	1/22/2010	5	RADIATOR	METAL	GREY	B	L-37	< LOD	0.03
360	1/22/2010	3	RADIATOR	METAL	GREY	C	L-37	< LOD	0.03
361	1/22/2010	1	WALL/MIDDLE	DRYWALL	WHITE	A	L-37	< LOD	0.04
362	1/22/2010	1	WALL/MIDDLE	DRYWALL	WHITE	B	L-37	< LOD	0.04
363	1/22/2010	1	WALL/MIDDLE	DRYWALL	WHITE	C	L-37	< LOD	0.03
364	1/22/2010	6	WALL/MIDDLE	DRYWALL	WHITE	A	L-37	< LOD	0.03
365	1/22/2010	6	WALL/MIDDLE	DRYWALL	WHITE	B	L-37	< LOD	0.03
366	1/22/2010	6	WALL/MIDDLE	DRYWALL	WHITE	C	L-37	< LOD	0.03
367	1/22/2010	6	WALL/MIDDLE	DRYWALL	WHITE	D	L-37	< LOD	0.03
368	1/22/2010	7	WALL/MIDDLE	DRYWALL	WHITE	A	L-37	< LOD	0.05

Table 2
XRF Data

Sample #	Sample Date	Sample Location[1]	Component	Substrate	Color	Wall	Unit Number	XRF Reading (mg/cm2)	XRF Error (mg/cm2)
369	1/22/2010	7	WALL/MIDDLE	DRYWALL	WHITE	B	L-37	< LOD	0.03
370	1/22/2010	7	WALL/MIDDLE	DRYWALL	WHITE	C	L-37	< LOD	0.03
371	1/22/2010	7	WALL/MIDDLE	DRYWALL	WHITE	D	L-37	< LOD	0.03
372	1/22/2010	8	WALL/MIDDLE	DRYWALL	WHITE	D	L-37	< LOD	0.03
373	1/22/2010	8	WALL/MIDDLE	DRYWALL	WHITE	C	L-37	< LOD	0.03
374	1/22/2010	8	WALL/MIDDLE	DRYWALL	WHITE	B	L-37	< LOD	0.03
375	1/22/2010	8	WALL/MIDDLE	DRYWALL	WHITE	A	L-37	< LOD	0.03
376	1/22/2010	9	WALL/MIDDLE	DRYWALL	WHITE	A	L-37	< LOD	0.03
377	1/22/2010	9	WALL/MIDDLE	DRYWALL	WHITE	B	L-37	< LOD	0.03
378	1/22/2010	9	WALL/MIDDLE	DRYWALL	WHITE	C	L-37	< LOD	0.03
379	1/22/2010	9	WALL/MIDDLE	DRYWALL	WHITE	D	L-37	< LOD	0.03
380	1/22/2010	10	WALL/MIDDLE	DRYWALL	WHITE	A	L-37	< LOD	0.03
381	1/22/2010	10	WALL/MIDDLE	DRYWALL	WHITE	B	L-37	< LOD	0.04
382	1/22/2010	10	WALL/MIDDLE	DRYWALL	WHITE	C	L-37	< LOD	0.03
383	1/22/2010	10	WALL/MIDDLE	DRYWALL	WHITE	D	L-37	< LOD	0.03
384	1/22/2010	SHUTTER CAL						10.19	0

Table 2
XRF Data

Sample #	Sample Date	Sample Location[1]	Component	Substrate	Color	Wall	Unit Number	XRF Reading (mg/cm2)	XRF Error (mg/cm2)
385	1/22/2010	11	WALL/MIDDLE	DRYWALL	WHITE	A	L-37	< LOD	0.03
386	1/22/2010	11	WALL/MIDDLE	DRYWALL	WHITE	B	L-37	< LOD	0.03
387	1/22/2010	11	WALL/MIDDLE	DRYWALL	WHITE	C	L-37	< LOD	0.03
388	1/22/2010	11	WALL/MIDDLE	DRYWALL	WHITE	D	L-37	< LOD	0.03
389	1/22/2010	11	CEILING	DRYWALL	WHITE		L-37	< LOD	0.04
390	1/22/2010	10	CEILING	DRYWALL	WHITE		L-37	< LOD	0.03
391	1/22/2010	9	CEILING	DRYWALL	WHITE		L-37	< LOD	0.03
392	1/22/2010	8	CEILING	DRYWALL	WHITE		L-37	< LOD	0.03
393	1/22/2010	7	CEILING	DRYWALL	WHITE		L-37	< LOD	0.03
394	1/22/2010	6	CEILING	DRYWALL	WHITE		L-37	< LOD	0.03
395	1/22/2010	1	CEILING	DRYWALL	WHITE		L-37	< LOD	0.08
396	1/22/2010	7	CLST SHELF	DRYWALL	VARNISH	D	L-37	< LOD	0.03
397	1/22/2010	8	CLST SHELF	DRYWALL	VARNISH	A	L-37	< LOD	0.03
398	1/22/2010	6	CLST SHELF	DRYWALL	BROWN	D	L-37	< LOD	0.03
399	1/22/2010	11	CLST SHELF	DRYWALL	VARNISH	B	L-37	< LOD	0.03
400	1/22/2010	11	CLST DOOR	WOOD	VARNISH	B	L-37	< LOD	0.03

Table 2
XRF Data

Sample #	Sample Date	Sample Location[1]	Component	Substrate	Color	Wall	Unit Number	XRF Reading (mg/cm2)	XRF Error (mg/cm2)
401	1/22/2010	6	CLST DOOR	WOOD	VARNISH	D	L-37	< LOD	0.03
402	1/22/2010	8	CLST DOOR	WOOD	VARNISH	A	L-37	< LOD	0.03
403	1/22/2010	7	CLST DOOR	WOOD	VARNISH	D	L-37	< LOD	0.03
404	1/22/2010	7	BASEBOARD	WOOD	VARNISH	C	L-37	< LOD	0.03
405	1/22/2010	8	BASEBOARD	WOOD	VARNISH	C	L-37	< LOD	0.03
406	1/22/2010	6	BASEBOARD	WOOD	VARNISH	C	L-37	< LOD	0.03
407	1/22/2010	11	BASEBOARD	WOOD	VARNISH	C	L-37	< LOD	0.03
408	1/22/2010	6	DR. TRIM	WOOD	VARNISH	A	L-37	< LOD	0.03
409	1/22/2010	6	STR RAIL CAP	WOOD	VARNISH	B	L-37	< LOD	0.03
410	1/22/2010	6	DR. CASING LF	WOOD	VARNISH	C	L-37	< LOD	0.03
411	1/22/2010	6	DOOR	WOOD	VARNISH	D	L-37	< LOD	0.03
412	1/22/2010	10	DOOR	WOOD	VARNISH	C	L-37	< LOD	0.03
413	1/22/2010	10	DR. TRIM	WOOD	VARNISH	C	L-37	< LOD	0.03
414	1/22/2010	9	CBNT FRONT	WOOD	VARNISH	C	L-37	< LOD	0.03
415	1/22/2010	7	DOOR	WOOD	VARNISH	A	L-37	< LOD	0.07
416	1/22/2010	7	DR. TRIM	WOOD	VARNISH	A	L-37	< LOD	0.03

Table 2
XRF Data

Sample #	Sample Date	Sample Location[1]	Component	Substrate	Color	Wall	Unit Number	XRF Reading (mg/cm2)	XRF Error (mg/cm2)
417	1/22/2010	7	WNDW TRIM	WOOD	VARNISH	C	L-37	< LOD	0.04
418	1/22/2010	8	WNDW TRIM	WOOD	VARNISH	C	L-37	< LOD	0.03
419	1/22/2010	11	WNDW TRIM	WOOD	VARNISH	A	L-37	< LOD	0.03
420	1/22/2010	11	RADIATOR	METAL	GREY	A	L-37	< LOD	0.03
421	1/22/2010	8	RADIATOR	METAL	GREY	C	L-37	< LOD	0.03
422	1/22/2010	7	RADIATOR	METAL	GREY	C	L-37	< LOD	0.03
423	1/22/2010	1	STR HAND RAIL	WOOD	VARNISH	B	L-37	< LOD	0.03
424	1/22/2010	1	STR BASEBOARD	WOOD	WHITE	B	L-37	< LOD	0.03
425	1/22/2010	1	STR RAIL CAP	WOOD	VARNISH	C	L-37	< LOD	0.03
426	1/22/2010	1	DR. TRIM	WOOD	VARNISH	A	L-37	< LOD	0.03
427	1/22/2010	1	DOOR	METAL	WHITE	A	L-37	< LOD	0.29
428	1/22/2010	PORCH REAR	DOOR	METAL	BLUE	A	L-37	< LOD	0.03
429	1/22/2010	PORCH REAR	DR. TRIM	WOOD	WHITE	A	L-37	< LOD	0.03
430	1/22/2010	PORCH REAR	DOOR	WOOD	GREY	C	L-37	< LOD	0.03
431	1/22/2010	PORCH REAR	WNDW TRIM	WOOD	WHITE	A	L-37	< LOD	0.03
432	1/22/2010	PORCH REAR	PORCH SIDING	WOOD	GREY	A	L-37	< LOD	0.03

Table 2
XRF Data

Sample #	Sample Date	Sample Location[1]	Component	Substrate	Color	Wall	Unit Number	XRF Reading (mg/cm2)	XRF Error (mg/cm2)
433	1/22/2010	PORCH REAR	PORCH SIDING	WOOD	GREY	B	L-37	< LOD	0.03
434	1/22/2010	PORCH REAR	PORCH SIDING	WOOD	GREY	C	L-37	< LOD	0.04
435	1/22/2010	SRM2572	CALIBRATE - FRONT					1.5	0.1
436	1/22/2010	SHUTTER CAL						9.96	0
437	1/22/2010	2	WALL/MIDDLE	DRYWALL	WHITE	A	L-35	< LOD	0.03
438	1/22/2010	2	WALL/MIDDLE	DRYWALL	WHITE	B	L-35	< LOD	0.03
439	1/22/2010	2	WALL/MIDDLE	DRYWALL	WHITE	C	L-35	< LOD	0.03
440	1/22/2010	2	WALL/MIDDLE	DRYWALL	WHITE	D	L-35	< LOD	0.03
441	1/22/2010	3	WALL/MIDDLE	DRYWALL	WHITE	A	L-35	< LOD	0.03
442	1/22/2010	3	WALL/MIDDLE	DRYWALL	WHITE	B	L-35	< LOD	0.03
443	1/22/2010	3	WALL/MIDDLE	WOOD	VARNISH	C	L-35	< LOD	0.06
444	1/22/2010	3	WALL/MIDDLE	DRYWALL	WHITE	E	L-35	< LOD	0.03
445	1/22/2010	4	WALL/MIDDLE	DRYWALL	WHITE	A	L-35	< LOD	0.03
446	1/22/2010	4	WALL/MIDDLE	DRYWALL	WHITE	B	L-35	< LOD	0.03
447	1/22/2010	4	WALL/MIDDLE	DRYWALL	WHITE	C	L-35	< LOD	0.03
448	1/22/2010	4	WALL/MIDDLE	DRYWALL	WHITE	D	L-35	< LOD	0.03

Table 2
XRF Data

Sample #	Sample Date	Sample Location[1]	Component	Substrate	Color	Wall	Unit Number	XRF Reading (mg/cm2)	XRF Error (mg/cm2)
449	1/22/2010	5	WALL/MIDDLE	DRYWALL	WHITE	A	L-35	< LOD	0.03
450	1/22/2010	5	WALL/MIDDLE	DRYWALL	WHITE	B	L-35	< LOD	0.03
451	1/22/2010	5	WALL/MIDDLE	DRYWALL	WHITE	C	L-35	< LOD	0.03
452	1/22/2010	5	CEILING	DRYWALL	WHITE		L-35	< LOD	0.03
453	1/22/2010	4	CEILING	DRYWALL	WHITE		L-35	< LOD	0.03
454	1/22/2010	3	CEILING	DRYWALL	WHITE		L-35	< LOD	0.03
455	1/22/2010	3	CLST SHELF	WOOD	VARNISH	B	L-35	< LOD	0.03
456	1/22/2010	2	CLST SHELF	WOOD	VARNISH	B	L-35	< LOD	0.03
457	1/22/2010	5	CLST SHELF	WOOD	BROWN	A	L-35	< LOD	0.03
458	1/22/2010	5	CLST DOOR	WOOD	VARNISH	A	L-35	< LOD	0.03
459	1/22/2010	3	CLST DOOR	WOOD	VARNISH	B	L-35	< LOD	0.03
460	1/22/2010	3	BASEBOARD	WOOD	VARNISH	E	L-35	< LOD	0.03
461	1/22/2010	2	BASEBOARD	WOOD	VARNISH	C	L-35	< LOD	0.03
462	1/22/2010	5	BASEBOARD	WOOD	VARNISH	B	L-35	< LOD	0.11
463	1/22/2010	4	CBNT FRONT	WOOD	VARNISH	A	L-35	< LOD	0.03
464	1/22/2010	4	TRIM	WOOD	VARNISH	C	L-35	< LOD	0.04

Table 2
XRF Data

Sample #	Sample Date	Sample Location[1]	Component	Substrate	Color	Wall	Unit Number	XRF Reading (mg/cm2)	XRF Error (mg/cm2)
465	1/22/2010	5	DR. TRIM	WOOD	VARNISH	A	L-35	< LOD	0.03
466	1/22/2010	3	DR. TRIM	WOOD	VARNISH	D	L-35	< LOD	0.03
467	1/22/2010	3	DOOR	METAL	WHITE	D	L-35	< LOD	0.1
468	1/22/2010	3	WNDW TRIM	WOOD	VARNISH	D	L-35	< LOD	0.03
469	1/22/2010	4	WNDW TRIM	WOOD	VARNISH	A	L-35	< LOD	0.03
470	1/22/2010	5	RADIATOR	METAL	GREY	B	L-35	< LOD	0.03
471	1/22/2010	3	RADIATOR	METAL	GREY	D	L-35	< LOD	0.03
472	1/22/2010	1	WALL/MIDDLE	DRYWALL	WHITE	A	L-35	< LOD	0.03
473	1/22/2010	1	WALL/MIDDLE	DRYWALL	WHITE	B	L-35	< LOD	0.03
474	1/22/2010	1	WALL/MIDDLE	DRYWALL	WHITE	C	L-35	< LOD	0.03
475	1/22/2010	6	WALL/MIDDLE	DRYWALL	WHITE	A	L-35	< LOD	0.03
476	1/22/2010	6	WALL/MIDDLE	DRYWALL	WHITE	B	L-35	< LOD	0.03
477	1/22/2010	6	WALL/MIDDLE	DRYWALL	WHITE	C	L-35	< LOD	0.03
478	1/22/2010	6	WALL/MIDDLE	DRYWALL	WHITE	D	L-35	< LOD	0.04
479	1/22/2010	7	WALL/MIDDLE	DRYWALL	WHITE	D	L-35	< LOD	0.03
480	1/22/2010	7	WALL/MIDDLE	DRYWALL	WHITE	C	L-35	< LOD	0.06

Table 2
XRF Data

Sample #	Sample Date	Sample Location[1]	Component	Substrate	Color	Wall	Unit Number	XRF Reading (mg/cm2)	XRF Error (mg/cm2)
481	1/22/2010	7	WALL/MIDDLE	DRYWALL	WHITE	B	L-35	< LOD	0.03
482	1/22/2010	7	WALL/MIDDLE	DRYWALL	WHITE	A	L-35	< LOD	0.03
483	1/22/2010	8	WALL/MIDDLE	DRYWALL	WHITE	A	L-35	< LOD	0.03
484	1/22/2010	8	WALL/MIDDLE	DRYWALL	WHITE	B	L-35	< LOD	0.03
485	1/22/2010	8	WALL/MIDDLE	DRYWALL	WHITE	C	L-35	< LOD	0.03
486	1/22/2010	9	WALL/MIDDLE	DRYWALL	WHITE	A	L-35	< LOD	0.03
487	1/22/2010	9	WALL/MIDDLE	DRYWALL	WHITE	B	L-35	< LOD	0.03
488	1/22/2010	9	WALL/MIDDLE	DRYWALL	WHITE	C	L-35	< LOD	0.03
489	1/22/2010	9	WALL/MIDDLE	DRYWALL	WHITE	D	L-35	< LOD	0.03
490	1/22/2010	10	WALL/MIDDLE	DRYWALL	WHITE	D	L-35	< LOD	0.03
491	1/22/2010	10	WALL/MIDDLE	DRYWALL	WHITE	C	L-35	< LOD	0.03
492	1/22/2010	10	WALL/MIDDLE	DRYWALL	WHITE	B	L-35	< LOD	0.03
493	1/22/2010	10	WALL/MIDDLE	DRYWALL	WHITE	A	L-35	< LOD	0.03
494	1/22/2010	SHUTTER CAL						8.96	0
495	1/22/2010	10	CEILING	DRYWALL	WHITE		L-35	< LOD	0.03
496	1/22/2010	9	CEILING	DRYWALL	WHITE		L-35	< LOD	0.03

Table 2
XRF Data

Sample #	Sample Date	Sample Location[1]	Component	Substrate	Color	Wall	Unit Number	XRF Reading (mg/cm2)	XRF Error (mg/cm2)
497	1/22/2010	8	CEILING	DRYWALL	WHITE		L-35	< LOD	0.03
498	1/22/2010	7	CEILING	DRYWALL	WHITE		L-35	< LOD	0.09
499	1/22/2010	6	CEILING	DRYWALL	WHITE		L-35	< LOD	0.03
500	1/22/2010	1	CEILING	DRYWALL	WHITE		L-35	< LOD	0.03
501	1/22/2010	6	CLST SHELF	WOOD	BROWN	D	L-35	< LOD	0.03
502	1/22/2010	7	CLST SHELF	WOOD	VARNISH	A	L-35	< LOD	0.03
503	1/22/2010	10	CLST SHELF	WOOD	BROWN	B	L-35	< LOD	0.03
504	1/22/2010	10	CLST DOOR	WOOD	VARNISH	B	L-35	< LOD	0.03
505	1/22/2010	6	CLST DOOR	WOOD	VARNISH	D	L-35	< LOD	0.03
506	1/22/2010	7	CLST DOOR	WOOD	VARNISH	A	L-35	< LOD	0.05
507	1/22/2010	7	BASEBOARD	WOOD	VARNISH	A	L-35	< LOD	0.03
508	1/22/2010	6	BASEBOARD	WOOD	VARNISH	B	L-35	< LOD	0.03
509	1/22/2010	10	BASEBOARD	WOOD	VARNISH	C	L-35	< LOD	0.07
510	1/22/2010	10	BASEBOARD	WOOD	VARNISH	C	L-35	< LOD	0.03
511	1/22/2010	6	DOOR	WOOD	VARNISH	C	L-35	< LOD	1.32
2302	4/26/2010	6	DOOR	WOOD	VARNISH	C	L-35	< LOD	0.03

Table 2
XRF Data

Sample #	Sample Date	Sample Location[1]	Component	Substrate	Color	Wall	Unit Number	XRF Reading (mg/cm2)	XRF Error (mg/cm2)
512	1/22/2010	6	DR. CASING LF	WOOD	VARNISH	D	L-35	< LOD	0.03
513	1/22/2010	6	DR. TRIM	WOOD	VARNISH	A	L-35	< LOD	0.03
514	1/22/2010	6	STR RAIL CAP	WOOD	VARNISH	B	L-35	< LOD	0.03
515	1/22/2010	9	DOOR	WOOD	VARNISH	C	L-35	< LOD	0.03
516	1/22/2010	9	DR. TRIM	WOOD	VARNISH	C	L-35	< LOD	0.07
517	1/22/2010	8	CBNT FRONT	WOOD	VARNISH	C	L-35	< LOD	0.03
518	1/22/2010	10	WNDW TRIM	WOOD	VARNISH	A	L-35	< LOD	0.03
519	1/22/2010	7	WNDW TRIM	WOOD	VARNISH	C	L-35	< LOD	0.03
520	1/22/2010	7	RADIATOR	METAL	GREY	C	L-35	< LOD	0.03
521	1/22/2010	10	RADIATOR	METAL	WHITE	A	L-35	< LOD	0.03
522	1/22/2010	1	STR HAND RAIL	WOOD	VARNISH	B	L-35	< LOD	0.03
523	1/22/2010	1	STR BASEBOARD	WOOD	WHITE	B	L-35	< LOD	0.03
524	1/22/2010	1	CEILING	DRYWALL	WHITE	B	L-35	< LOD	0.03
525	1/22/2010	1	DOOR	METAL	WHITE	A	L-35	< LOD	0.2
526	1/22/2010	1	DR. TRIM	WOOD	VARNISH	A	L-35	< LOD	0.03
527	1/22/2010	PORCH REAR	DR. TRIM	WOOD	WHITE	A	L-35	< LOD	0.03

Table 2
XRF Data

Sample #	Sample Date	Sample Location[1]	Component	Substrate	Color	Wall	Unit Number	XRF Reading (mg/cm2)	XRF Error (mg/cm2)
528	1/22/2010	PORCH REAR	DOOR	METAL	BLUE	A	L-35	1.9	0.4
529	1/22/2010	PORCH REAR	DOOR	WOOD	GREY	B	L-35	< LOD	0.03
530	1/22/2010	PORCH REAR	WNDW TRIM	WOOD	WHITE	A	L-35	< LOD	0.03
531	1/22/2010	PORCH REAR	PORCH SIDING	WOOD	GREY	A	L-35	< LOD	0.03
532	1/22/2010	PORCH REAR	PORCH SIDING	WOOD	GREY	C	L-35	< LOD	0.03
533	1/22/2010	SRM2573	CALIBRATE - FRONT					1.1	0.1
534	1/23/2010	SRM2573	CALIBRATE - FRONT					1	0.1
535	1/23/2010	2	DOOR	WOOD	VARNISH	A	BLDG. F	0	0.02
536	1/23/2010	2	DR. TRIM	WOOD	VARNISH	D	BLDG. F	0	0.02
537	1/23/2010	2	CEILING	WOOD	VARNISH		BLDG. F	0	0.02
538	1/23/2010	2	CEIL. JOIST	WOOD	VARNISH		BLDG. F	0	0.02
539	1/23/2010	3	WALL/MIDDLE	DRYWALL	WHITE	A	BLDG. F	0	0.02
540	1/23/2010	3	WALL/MIDDLE	DRYWALL	WHITE	B	BLDG. F	0	0.02
541	1/23/2010	3	WALL/MIDDLE	DRYWALL	WHITE	C	BLDG. F	0.01	0.03
542	1/23/2010	3	WALL/MIDDLE	DRYWALL	WHITE	D	BLDG. F	0	0.02
543	1/23/2010	3	CEILING	DRYWALL	WHITE	D	BLDG. F	0	0.02

Table 2
XRF Data

Sample #	Sample Date	Sample Location[1]	Component	Substrate	Color	Wall	Unit Number	XRF Reading (mg/cm2)	XRF Error (mg/cm2)
544	1/23/2010	3	DOOR	WOOD	VARNISH	B	BLDG. F	0	0.02
545	1/23/2010	3	DR. TRIM	WOOD	VARNISH	B	BLDG. F	0	0.03
546	1/23/2010	1	CEILING	WOOD	VARNISH	B	BLDG. F	0	0.02
547	1/23/2010	1	CEIL. JOIST	WOOD	VARNISH	B	BLDG. F	0	0.02
548	1/23/2010	1	WNDW TRIM	WOOD	VARNISH	A	BLDG. F	0	0.02
549	1/23/2010	1	DR. TRIM	WOOD	VARNISH	A	BLDG. F	0	0.02
550	1/23/2010	1	DOOR	METAL	GREY	A	BLDG. F	0	0.02
551	1/23/2010	1	DOOR	WOOD	VARNISH	C	BLDG. F	0	0.02
552	1/23/2010	1	WALL/MIDDLE	DRYWALL	WHITE	A	BLDG. F	0	0.02
553	1/23/2010	1	WALL/MIDDLE	DRYWALL	WHITE	B	BLDG. F	0	0.02
554	1/23/2010	1	WALL/MIDDLE	DRYWALL	WHITE	C	BLDG. F	0	0.02
555	1/23/2010	1	WALL/MIDDLE	DRYWALL	WHITE	D	BLDG. F	0	0.02
556	1/23/2010	1	MAILBOX FRAME	WOOD	GREY	C	BLDG. F	0	0.02
557	1/23/2010	1	COUNTERTOP SUPRT	WOOD	WHITE	A	BLDG. F	0.01	0.04
558	1/23/2010	SRM2574	CALIBRATE - FRONT					0.7	0.2
559	1/24/2010	SRM2572	CALIBRATE - FRONT					1.5	0.1

Table 2
XRF Data

Sample #	Sample Date	Sample Location[1]	Component	Substrate	Color	Wall	Unit Number	XRF Reading (mg/cm2)	XRF Error (mg/cm2)
560	1/24/2010	EXTERIOR	EXT. SIDIDNG	WOOD	GREY	A	BLDG. A	0	0.02
561	1/24/2010	EXTERIOR	EXT. SIDIDNG	WOOD	GREY	B	BLDG. A	0	0.02
562	1/24/2010	EXTERIOR	EXT. SIDIDNG	WOOD	GREY	C	BLDG. A	0	0.02
563	1/24/2010	EXTERIOR	EXT. SIDIDNG	WOOD	GREY	D	BLDG. A	0	0.02
564	1/24/2010	SHUTTER CAL						10.41	0
565	1/24/2010	EXTERIOR	EXT. CORNER BOARD	WOOD	WHITE	A	BLDG. A	< LOD	0.03
566	1/24/2010	EXTERIOR	EXT. FASCIA	WOOD	WHITE	D	BLDG. A	< LOD	0.03
567	1/24/2010	EXTERIOR	WNDW TRIM	WOOD	WHITE	C	BLDG. A	< LOD	0.03
568	1/24/2010	EXTERIOR	DR. TRIM	WOOD	WHITE	D	BLDG. A	< LOD	0.18
569	1/24/2010	EXTERIOR	WNDW TRIM	WOOD	WHITE	A	BLDG. C	< LOD	0.03
570	1/24/2010	EXTERIOR	DR. TRIM	WOOD	WHITE	A	BLDG. C	< LOD	0.03
571	1/24/2010	EXTERIOR	EXT. FASCIA	WOOD	WHITE	D	BLDG. C	< LOD	0.03
572	1/24/2010	EXTERIOR	ELECTRICAL BOX	METAL	GREY	C	BLDG. C	< LOD	0.03
573	1/24/2010	EXTERIOR	EXT.DOWN SPOUTS	METAL	GREY	C	BLDG. C	< LOD	0.03
574	1/24/2010	EXTERIOR	EXT. GUTTERS	METAL	WHITE	C	BLDG. C	< LOD	0.03
575	1/24/2010	EXTERIOR	EXT. CORNER BOARD	WOOD	WHITE	B	BLDG. C	< LOD	0.04

Table 2
XRF Data

Sample #	Sample Date	Sample Location[1]	Component	Substrate	Color	Wall	Unit Number	XRF Reading (mg/cm2)	XRF Error (mg/cm2)
576	1/24/2010	EXTERIOR	DOOR	METAL	PURPLE	A	BLDG. C	1.3	0.1
577	1/24/2010	EXTERIOR	EXT. SIDIDNG	WOOD	GREY	A	BLDG. C	< LOD	0.03
578	1/24/2010	EXTERIOR	EXT. SIDIDNG	WOOD	GREY	B	BLDG. C	< LOD	0.03
579	1/24/2010	EXTERIOR	EXT. SIDIDNG	WOOD	GREY	C	BLDG. C	< LOD	0.03
580	1/24/2010	EXTERIOR	EXT. SIDIDNG	WOOD	GREY	D	BLDG. C	< LOD	0.03
581	1/24/2010	EXTERIOR	EXT. SIDIDNG	WOOD	GREY	A	BLDG. D	< LOD	0.03
582	1/24/2010	EXTERIOR	EXT. SIDIDNG	WOOD	GREY	B	BLDG. D	< LOD	0.03
583	1/24/2010	EXTERIOR	EXT. SIDIDNG	WOOD	GREY	C	BLDG. D	< LOD	0.03
584	1/24/2010	EXTERIOR	EXT. SIDIDNG	WOOD	GREY	D	BLDG. D	< LOD	0.03
585	1/24/2010	EXTERIOR	EXT. FASCIA	WOOD	WHITE	D	BLDG. D	< LOD	0.03
586	1/24/2010	EXTERIOR	WNDW TRIM	WOOD	WHITE	A	BLDG. D	< LOD	0.03
587	1/24/2010	EXTERIOR	EXT. CORNER BOARD	WOOD	WHITE	A	BLDG. D	< LOD	0.05
588	1/24/2010	EXTERIOR	DR. TRIM	WOOD	WHITE	A	BLDG. D	< LOD	0.03
589	1/24/2010	EXTERIOR	DOOR	METAL	BLUE	A	BLDG. D	< LOD	0.19
590	1/24/2010	EXTERIOR	EXT.DOWN SPOUTS	METAL	GREY	A	BLDG. D	< LOD	0.13
591	1/24/2010	EXTERIOR	EXT. GUTTERS	METAL	WHITE	A	BLDG. D	< LOD	0.03

Table 2
XRF Data

Sample #	Sample Date	Sample Location[1]	Component	Substrate	Color	Wall	Unit Number	XRF Reading (mg/cm2)	XRF Error (mg/cm2)
592	1/24/2010	EXTERIOR	ELECTRICAL BOX	METAL	GREY	C	BLDG. D	< LOD	1.18
2303	4/26/2010	EXTERIOR	ELECTRICAL BOX	METAL	GREY	C	BLDG. D	< LOD	0.94
593	1/24/2010	EXTERIOR	ELECTRICAL BOX	METAL	GREY	C	BLDG. E	< LOD	0.23
594	1/24/2010	EXTERIOR	EXT.DOWN SPOUTS	METAL	GREY	C	BLDG. E	< LOD	0.03
595	1/24/2010	EXTERIOR	EXT. GUTTERS	METAL	WHITE	C	BLDG. E	< LOD	0.03
596	1/24/2010	EXTERIOR	EXT. CORNER BOARD	WOOD	WHITE	B	BLDG. E	< LOD	0.03
597	1/24/2010	EXTERIOR	WNDW TRIM	WOOD	WHITE	A	BLDG. E	< LOD	0.03
598	1/24/2010	EXTERIOR	DR. TRIM	WOOD	WHITE	A	BLDG. E	< LOD	0.03
599	1/24/2010	EXTERIOR	DOOR	METAL	GREEN	A	BLDG. E	< LOD	0.06
600	1/24/2010	EXTERIOR	EXT. FASCIA	WOOD	WHITE	D	BLDG. E	< LOD	0.03
601	1/24/2010	EXTERIOR	EXT. SIDIDNG	WOOD	GREY	D	BLDG. E	< LOD	0.03
602	1/24/2010	EXTERIOR	EXT. SIDIDNG	WOOD	GREY	C	BLDG. E	< LOD	0.07
603	1/24/2010	EXTERIOR	EXT. SIDIDNG	WOOD	GREY	B	BLDG. E	< LOD	0.05
604	1/24/2010	EXTERIOR	EXT. SIDIDNG	WOOD	GREY	A	BLDG. E	< LOD	0.05
605	1/24/2010	EXTERIOR	EXT. SIDIDNG	WOOD	GREY	A	BLDG. F	< LOD	0.03
606	1/24/2010	EXTERIOR	EXT. SIDIDNG	WOOD	GREY	B	BLDG. F	< LOD	0.04

Table 2
XRF Data

Sample #	Sample Date	Sample Location[1]	Component	Substrate	Color	Wall	Unit Number	XRF Reading (mg/cm2)	XRF Error (mg/cm2)
607	1/24/2010	EXTERIOR	EXT. SIDIDNG	WOOD	GREY	C	BLDG. F	< LOD	0.03
608	1/24/2010	EXTERIOR	EXT. SIDIDNG	WOOD	GREY	D	BLDG. F	< LOD	0.03
609	1/24/2010	EXTERIOR	DR. TRIM	WOOD	WHITE	A	BLDG. F	< LOD	0.04
610	1/24/2010	EXTERIOR	WNDW TRIM	WOOD	WHITE	B	BLDG. F	< LOD	0.04
611	1/24/2010	EXTERIOR	EXT. CORNER BOARD	WOOD	WHITE	C	BLDG. F	< LOD	0.04
612	1/24/2010	EXTERIOR	EXT. FASCIA	WOOD	WHITE	C	BLDG. F	< LOD	0.04
613	1/24/2010	EXTERIOR	EXT. SOFFIT	WOOD	VARNISH	C	BLDG. F	< LOD	0.03
614	1/24/2010	EXTERIOR	EXT. GUTTERS	METAL	WHITE	D	BLDG. F	< LOD	0.03
615	1/24/2010	EXTERIOR	EXT.DOWN SPOUTS	METAL	WHITE	A	BLDG. F	< LOD	0.08
616	1/24/2010	EXTERIOR	DOOR	METAL	GREY	A	BLDG. F	< LOD	0.03
617	1/24/2010	EXTERIOR	CEIL. JOIST	WOOD	WHITE	B	BLDG. F	< LOD	0.03
618	1/24/2010	EXTERIOR	COLUMN	WOOD	WHITE	B	BLDG. F	< LOD	0.03
619	1/24/2010	SHUTTER CAL						10.09	0
620	1/24/2010	SRM2573	CALIBRATE - FRONT					1.1	0.1
621	1/24/2010	EXTERIOR	EXT. SIDIDNG	WOOD	GREY	A	BDLG. G	< LOD	0.03
622	1/24/2010	EXTERIOR	EXT. SIDIDNG	WOOD	GREY	B	BDLG. G	< LOD	0.03

Table 2
XRF Data

Sample #	Sample Date	Sample Location[1]	Component	Substrate	Color	Wall	Unit Number	XRF Reading (mg/cm2)	XRF Error (mg/cm2)
623	1/24/2010	EXTERIOR	EXT. SIDIDNG	WOOD	GREY	C	BDLG. G	< LOD	0.03
624	1/24/2010	EXTERIOR	EXT. SIDIDNG	WOOD	GREY	D	BDLG. G	< LOD	0.03
625	1/24/2010	EXTERIOR	EXT. FASCIA	WOOD	WHITE	D	BDLG. G	< LOD	0.03
626	1/24/2010	EXTERIOR	EXT. CORNER BOARD	WOOD	WHITE	A	BDLG. G	< LOD	0.03
627	1/24/2010	EXTERIOR	WNDW TRIM	WOOD	WHITE	A	BDLG. G	< LOD	0.09
628	1/24/2010	EXTERIOR	EXT.DOWN SPOUTS	METAL	GREY	A	BDLG. G	< LOD	0.03
629	1/24/2010	EXTERIOR	EXT. GUTTERS	METAL	WHITE	A	BDLG. G	< LOD	0.03
630	1/24/2010	EXTERIOR	ELECTRICAL BOX	METAL	GREY	C	BDLG. G	< LOD	1.14
2304	4/26/2010	EXTERIOR	ELECTRICAL BOX	METAL	GREY	C	BDLG. G	< LOD	0.53
631	1/24/2010	EXTERIOR	ELECTRICAL BOX	METAL	GREY	C	BLDG. H	< LOD	0.12
632	1/24/2010	EXTERIOR	EXT.DOWN SPOUTS	METAL	GREY	C	BLDG. H	< LOD	0.03
633	1/24/2010	EXTERIOR	EXT. GUTTERS	METAL	WHITE	C	BLDG. H	< LOD	0.03
634	1/24/2010	EXTERIOR	EXT. FASCIA	WOOD	WHITE	B	BLDG. H	< LOD	0.03
635	1/24/2010	EXTERIOR	DR. TRIM	WOOD	WHITE	A	BLDG. H	< LOD	0.03
636	1/24/2010	EXTERIOR	DOOR	METAL	GREEN	A	BLDG. H	0.8	0.1
637	1/24/2010	EXTERIOR	WNDW TRIM	WOOD	WHITE	A	BLDG. H	< LOD	0.05

Table 2
XRF Data

Sample #	Sample Date	Sample Location[1]	Component	Substrate	Color	Wall	Unit Number	XRF Reading (mg/cm2)	XRF Error (mg/cm2)
638	1/24/2010	EXTERIOR	EXT. SIDIDNG	WOOD	GREY	A	BLDG. H	< LOD	0.03
639	1/24/2010	EXTERIOR	EXT. SIDIDNG	WOOD	GREY	D	BLDG. H	< LOD	0.03
640	1/24/2010	EXTERIOR	EXT. SIDIDNG	WOOD	GREY	C	BLDG. H	< LOD	0.03
641	1/24/2010	EXTERIOR	EXT. SIDIDNG	WOOD	GREY	B	BLDG. H	< LOD	0.03
642	1/24/2010	EXTERIOR	EXT. SIDIDNG	WOOD	GREY	A	BLDG. K	< LOD	0.03
643	1/24/2010	EXTERIOR	EXT. SIDIDNG	WOOD	GREY	B	BLDG. K	< LOD	0.03
644	1/24/2010	EXTERIOR	EXT. SIDIDNG	WOOD	GREY	C	BLDG. K	< LOD	0.03
645	1/24/2010	EXTERIOR	EXT. SIDIDNG	WOOD	GREY	D	BLDG. K	< LOD	0.03
646	1/24/2010	EXTERIOR	EXT. FASCIA	WOOD	WHITE	D	BLDG. K	< LOD	0.03
647	1/24/2010	EXTERIOR	EXT. CORNER BOARD	WOOD	WHITE	A	BLDG. K	< LOD	0.03
648	1/24/2010	EXTERIOR	WNDW TRIM	WOOD	WHITE	A	BLDG. K	< LOD	0.03
649	1/24/2010	EXTERIOR	DR. TRIM	WOOD	WHITE	A	BLDG. K	< LOD	0.03
650	1/24/2010	EXTERIOR	DOOR	METAL	BLUE	A	BLDG. K	< LOD	0.35
651	1/24/2010	EXTERIOR	EXT.DOWN SPOUTS	METAL	GREY	A	BLDG. K	< LOD	0.03
652	1/24/2010	EXTERIOR	EXT. GUTTERS	METAL	WHITE	C	BLDG. K	< LOD	0.03
653	1/24/2010	EXTERIOR	ELECTRICAL BOX	METAL	GREY	C	BLDG. K	< LOD	0.25

Table 2
XRF Data

Sample #	Sample Date	Sample Location[1]	Component	Substrate	Color	Wall	Unit Number	XRF Reading (mg/cm2)	XRF Error (mg/cm2)
654	1/24/2010	EXTERIOR	ELECTRICAL BOX	METAL	GREY	C	BLDG. L	< LOD	0.03
655	1/24/2010	EXTERIOR	EXT.DOWN SPOUTS	METAL	GREY	C	BLDG. L	< LOD	0.03
656	1/24/2010	EXTERIOR	EXT. GUTTERS	METAL	WHITE	C	BLDG. L	< LOD	0.03
657	1/24/2010	EXTERIOR	EXT. FASCIA	WOOD	WHITE	C	BLDG. L	< LOD	0.03
658	1/24/2010	EXTERIOR	EXT. CORNER BOARD	WOOD	WHITE	B	BLDG. L	< LOD	0.03
659	1/24/2010	EXTERIOR	WNDW TRIM	WOOD	WHITE	A	BLDG. L	< LOD	0.06
660	1/24/2010	EXTERIOR	DR. TRIM	WOOD	WHITE	A	BLDG. L	< LOD	0.03
661	1/24/2010	EXTERIOR	DOOR	METAL	GREEN	A	BLDG. L	< LOD	0.03
662	1/24/2010	EXTERIOR	EXT. SIDIDNG	WOOD	GREY	A	BLDG. M	< LOD	0.03
663	1/24/2010	EXTERIOR	EXT. SIDIDNG	WOOD	GREY	B	BLDG. M	< LOD	0.03
664	1/24/2010	EXTERIOR	EXT. SIDIDNG	WOOD	GREY	C	BLDG. M	< LOD	0.03
665	1/24/2010	EXTERIOR	EXT. SIDIDNG	WOOD	GREY	D	BLDG. M	< LOD	0.03
666	1/24/2010	EXTERIOR	EXT. FASCIA	WOOD	WHITE	D	BLDG. M	< LOD	0.03
667	1/24/2010	EXTERIOR	EXT. CORNER BOARD	WOOD	WHITE	A	BLDG. M	< LOD	0.03
668	1/24/2010	EXTERIOR	WNDW TRIM	WOOD	WHITE	A	BLDG. M	< LOD	0.09
669	1/24/2010	EXTERIOR	EXT. GUTTERS	METAL	WHITE	A	BLDG. M	< LOD	0.03

Table 2
XRF Data

Sample #	Sample Date	Sample Location[1]	Component	Substrate	Color	Wall	Unit Number	XRF Reading (mg/cm2)	XRF Error (mg/cm2)
670	1/24/2010	EXTERIOR	EXT.DOWN SPOUTS	METAL	GREY	A	BLDG. M	< LOD	0.03
671	1/24/2010	EXTERIOR	ELECTRICAL BOX	METAL	GREY	C	BLDG. M	< LOD	0.37
672	1/24/2010	EXTERIOR	ELECTRICAL BOX	METAL	GREY	C	BLDG. N	< LOD	0.05
673	1/24/2010	EXTERIOR	EXT.DOWN SPOUTS	METAL	GREY	C	BLDG. N	< LOD	0.04
674	1/24/2010	SHUTTER CAL						9.47	0
675	1/24/2010	EXTERIOR	EXT. GUTTERS	METAL	WHITE	A	BLDG. N	< LOD	0.03
676	1/24/2010	EXTERIOR	EXT. FASCIA	WOOD	WHITE	D	BLDG. N	0	0.02
677	1/24/2010	EXTERIOR	EXT. CORNER BOARD	WOOD	WHITE	A	BLDG. N	0	0.02
678	1/24/2010	EXTERIOR	WNDW TRIM	WOOD	WHITE	A	BLDG. N	0	0.02
679	1/24/2010	EXTERIOR	EXT. SIDIDNG	WOOD	GREY	A	BLDG. N	0	0.02
680	1/24/2010	EXTERIOR	EXT. SIDIDNG	WOOD	GREY	B	BLDG. N	0	0.02
681	1/24/2010	EXTERIOR	EXT. SIDIDNG	WOOD	GREY	C	BLDG. N	0	0.02
682	1/24/2010	EXTERIOR	EXT. SIDIDNG	WOOD	GREY	D	BLDG. N	0	0.02
683	1/24/2010	EXTERIOR	EXT. SIDIDNG	WOOD	GREY	A	BLDG. Q	0	0.02
684	1/24/2010	EXTERIOR	EXT. SIDIDNG	WOOD	GREY	B	BLDG. Q	0	0.02
685	1/24/2010	EXTERIOR	EXT. SIDIDNG	WOOD	GREY	C	BLDG. Q	0	0.02

Table 2
XRF Data

Sample #	Sample Date	Sample Location[1]	Component	Substrate	Color	Wall	Unit Number	XRF Reading (mg/cm2)	XRF Error (mg/cm2)
686	1/24/2010	EXTERIOR	EXT. SIDIDNG	WOOD	GREY	D	BLDG. Q	0	0.02
687	1/24/2010	EXTERIOR	EXT. FASCIA	WOOD	WHITE	D	BLDG. Q	0	0.02
688	1/24/2010	EXTERIOR	EXT. CORNER BOARD	WOOD	WHITE	A	BLDG. Q	0	0.02
689	1/24/2010	EXTERIOR	WNDW TRIM	WOOD	WHITE	A	BLDG. Q	0.01	0.06
690	1/24/2010	EXTERIOR	EXT. GUTTERS	METAL	WHITE	A	BLDG. Q	0	0.02
691	1/24/2010	EXTERIOR	EXT.DOWN SPOUTS	METAL	GREY	C	BLDG. Q	0	0.02
692	1/24/2010	EXTERIOR	ELECTRICAL BOX	METAL	GREY	C	BLDG. Q	0.21	0.7
693	1/24/2010	STAIR B1	STR WALL	WOOD	GREY	B	BLDG. Q	0	0.02
694	1/24/2010	STAIR B1	STR WALL	WOOD	GREY	C	BLDG. Q	0	0.02
695	1/24/2010	STAIR B1	STR WALL	WOOD	GREY	D	BLDG. Q	0	0.02
696	1/24/2010	STAIR B1	CEILING	WOOD	GREY	D	BLDG. Q	0.01	0.06
697	1/24/2010	STAIR B1	DR. TRIM	WOOD	WHITE	D	BLDG. Q	0	0.02
698	1/24/2010	STAIR B1	DOOR	METAL	GREEN	D	BLDG. Q	0.8	0.1
699	1/24/2010	STAIR B1	STR HAND RAIL	WOOD	VARNISH	D	BLDG. Q	0.01	0.05
700	1/24/2010	STAIR B1	STR STRINGER	WOOD	GREY	D	BLDG. Q	0	0.02
701	1/24/2010	STAIR B1	STR STRINGER	WOOD	GREY	D	BLDG. P	0.01	0.04

Table 2
XRF Data

Sample #	Sample Date	Sample Location[1]	Component	Substrate	Color	Wall	Unit Number	XRF Reading (mg/cm2)	XRF Error (mg/cm2)
702	1/24/2010	STAIR B1	STR HAND RAIL	WOOD	VARNISH	D	BLDG. P	0	0.02
703	1/24/2010	STAIR B1	DR. TRIM	WOOD	WHITE	D	BLDG. P	0	0.02
704	1/24/2010	STAIR B1	DOOR	METAL	PURPLE	D	BLDG. P	0.01	0.04
705	1/24/2010	STAIR B1	CEILING	WOOD	GREY	D	BLDG. P	0	0.02
706	1/24/2010	STAIR B1	STR WALL	WOOD	GREY	D	BLDG. P	0	0.02
707	1/24/2010	STAIR B1	STR WALL	WOOD	GREY	C	BLDG. P	0	0.02
708	1/24/2010	STAIR B1	STR WALL	WOOD	GREY	B	BLDG. P	0	0.02
709	1/24/2010	STAIR D1	STR WALL	WOOD	GREY	B	BLDG. P	0	0.02
710	1/24/2010	STAIR D1	STR WALL	WOOD	GREY	C	BLDG. P	0	0.02
711	1/24/2010	STAIR D1	STR WALL	WOOD	GREY	D	BLDG. P	0	0.02
712	1/24/2010	STAIR D1	CEILING	WOOD	GREY	D	BLDG. P	0.01	0.03
713	1/24/2010	STAIR D1	DOOR	METAL	PURPLE	B	BLDG. P	0.02	0.05
714	1/24/2010	STAIR D1	DR. TRIM	WOOD	WHITE	B	BLDG. P	0	0.02
715	1/24/2010	STAIR D1	STR HAND RAIL	WOOD	VARNISH	B	BLDG. P	0.02	0.07
716	1/24/2010	STAIR D1	STR STRINGER	WOOD	GREY	B	BLDG. P	0	0.02
717	1/24/2010	STAIR B1	STR STRINGER	WOOD	GREY	B	BLDG. N	0	0.02

Table 2
XRF Data

Sample #	Sample Date	Sample Location[1]	Component	Substrate	Color	Wall	Unit Number	XRF Reading (mg/cm2)	XRF Error (mg/cm2)
718	1/24/2010	STAIR B1	STR HAND RAIL	WOOD	VARNISH	D	BLDG. N	0.02	0.08
719	1/24/2010	STAIR B1	DR. TRIM	WOOD	WHITE	D	BLDG. N	0.01	0.03
720	1/24/2010	STAIR B1	DOOR	METAL	BLUE	D	BLDG. N	0.04	0.11
721	1/24/2010	STAIR B1	CEILING	WOOD	GREY	D	BLDG. N	0	0.02
722	1/24/2010	STAIR B1	STR WALL	WOOD	GREY	D	BLDG. N	0	0.02
723	1/24/2010	STAIR B1	STR WALL	WOOD	GREY	C	BLDG. N	0	0.02
724	1/24/2010	STAIR B1	STR WALL	WOOD	GREY	B	BLDG. N	0	0.02
725	1/24/2010	STAIR B1	STR WALL	WOOD	GREY	B	BLDG. M	0	0.02
726	1/24/2010	STAIR B1	STR WALL	WOOD	GREY	C	BLDG. M	0	0.02
727	1/24/2010	STAIR B1	STR WALL	WOOD	GREY	D	BLDG. M	0	0.02
728	1/24/2010	SHUTTER CAL						10.07	0
729	1/24/2010	STAIR B1	CEILING	WOOD	GREY	D	BLDG. M	< LOD	0.03
730	1/24/2010	STAIR B1	DR. TRIM	WOOD	WHITE	D	BLDG. M	< LOD	0.03
731	1/24/2010	STAIR B1	DOOR	METAL	PURPLE	D	BLDG. M	< LOD	0.11
732	1/24/2010	STAIR B1	STR HAND RAIL	WOOD	VARNISH	D	BLDG. M	< LOD	0.06
733	1/24/2010	STAIR B1	STR STRINGER	WOOD	GREY	D	BLDG. M	< LOD	0.03

Table 2
XRF Data

Sample #	Sample Date	Sample Location[1]	Component	Substrate	Color	Wall	Unit Number	XRF Reading (mg/cm2)	XRF Error (mg/cm2)
734	1/24/2010	STAIR D1	STR STRINGER	WOOD	GREY	D	BLDG. M	< LOD	0.03
735	1/24/2010	STAIR D1	DOOR	METAL	PURPLE	B	BLDG. M	< LOD	0.04
736	1/24/2010	STAIR D1	DR. TRIM	WOOD	WHITE	B	BLDG. M	< LOD	0.12
737	1/24/2010	STAIR D1	STR HAND RAIL	WOOD	VARNISH	B	BLDG. M	< LOD	0.07
738	1/24/2010	STAIR D1	CEILING	WOOD	GREY	B	BLDG. M	< LOD	0.03
739	1/24/2010	STAIR D1	STR WALL	WOOD	GREY	B	BLDG. M	< LOD	0.03
740	1/24/2010	STAIR D1	STR WALL	WOOD	GREY	C	BLDG. M	< LOD	0.03
741	1/24/2010	STAIR D1	STR WALL	WOOD	GREY	D	BLDG. M	< LOD	0.03
742	1/24/2010	STAIR B1	STR WALL	WOOD	GREY	D	BLDG. J	< LOD	0.03
743	1/24/2010	STAIR B1	STR WALL	WOOD	GREY	C	BLDG. J	< LOD	0.03
744	1/24/2010	STAIR B1	STR WALL	WOOD	GREY	B	BLDG. J	< LOD	0.03
745	1/24/2010	STAIR B1	CEILING	WOOD	GREY	B	BLDG. J	< LOD	0.03
746	1/24/2010	STAIR B1	DR. TRIM	WOOD	WHITE	D	BLDG. J	< LOD	0.03
747	1/24/2010	STAIR B1	DOOR	METAL	PURPLE	D	BLDG. J	< LOD	0.07
748	1/24/2010	STAIR B1	STR HAND RAIL	WOOD	VARNISH	D	BLDG. J	< LOD	0.03
749	1/24/2010	STAIR B1	STR STRINGER	WOOD	GREY	D	BLDG. J	< LOD	0.03

Table 2
XRF Data

Sample #	Sample Date	Sample Location[1]	Component	Substrate	Color	Wall	Unit Number	XRF Reading (mg/cm2)	XRF Error (mg/cm2)
750	1/24/2010	STAIR D1	STR STRINGER	WOOD	GREY	D	BLDG. J	< LOD	0.03
751	1/24/2010	STAIR D1	STR HAND RAIL	WOOD	VARNISH	B	BLDG. J	< LOD	0.03
752	1/24/2010	STAIR D1	DR. TRIM	WOOD	WHITE	B	BLDG. J	< LOD	0.03
753	1/24/2010	STAIR D1	DOOR	METAL	PURPLE	B	BLDG. J	< LOD	0.04
754	1/24/2010	STAIR D1	CEILING	WOOD	GREY	B	BLDG. J	< LOD	0.03
755	1/24/2010	STAIR D1	STR WALL	WOOD	GREY	B	BLDG. J	< LOD	0.07
756	1/24/2010	STAIR D1	STR WALL	WOOD	GREY	C	BLDG. J	< LOD	0.03
757	1/24/2010	STAIR D1	STR WALL	WOOD	GREY	D	BLDG. J	< LOD	0.03
758	1/24/2010	STAIR B1	STR WALL	WOOD	GREY	D	BLDG. G	< LOD	0.03
759	1/24/2010	STAIR B1	STR WALL	WOOD	GREY	C	BLDG. G	< LOD	0.03
760	1/24/2010	STAIR B1	STR WALL	WOOD	GREY	B	BLDG. G	< LOD	0.05
761	1/24/2010	STAIR B1	CEILING	WOOD	GREY	D	BLDG. G	< LOD	0.03
762	1/24/2010	STAIR B1	DR. TRIM	WOOD	WHITE	D	BLDG. G	< LOD	0.04
763	1/24/2010	STAIR B1	DOOR	METAL	PURPLE	D	BLDG. G	< LOD	0.46
764	1/24/2010	STAIR B1	STR HAND RAIL	WOOD	VARNISH	D	BLDG. G	< LOD	0.03
765	1/24/2010	STAIR B1	STR STRINGER	WOOD	GREY	D	BLDG. G	< LOD	0.03

Table 2
XRF Data

Sample #	Sample Date	Sample Location[1]	Component	Substrate	Color	Wall	Unit Number	XRF Reading (mg/cm2)	XRF Error (mg/cm2)
766	1/24/2010	STAIR D1	STR STRINGER	WOOD	GREY	D	BLDG. A	< LOD	0.03
767	1/24/2010	STAIR D1	STR HAND RAIL	WOOD	VARNISH	B	BLDG. A	< LOD	0.03
768	1/24/2010	STAIR D1	DR. TRIM	WOOD	WHITE	B	BLDG. A	< LOD	0.03
769	1/24/2010	STAIR D1	DOOR	METAL	BLUE	B	BLDG. A	< LOD	0.07
770	1/24/2010	STAIR D1	CEILING	WOOD	GREY	B	BLDG. A	< LOD	0.03
771	1/24/2010	STAIR D1	STR WALL	WOOD	GREY	B	BLDG. A	< LOD	0.03
772	1/24/2010	STAIR D1	STR WALL	WOOD	GREY	C	BLDG. A	< LOD	0.06
773	1/24/2010	STAIR D1	STR WALL	WOOD	GREY	D	BLDG. A	< LOD	0.05
774	1/24/2010	SRM2574	CALIBRATE - FRONT					0.7	0.2
775	1/25/2010	SHUTTER CAL						9.67	0
776	1/25/2010	SRM2571	CALIBRATE - FRONT					3.7	0.3
777	1/25/2010	1	WALL/MIDDLE	DRYWALL	WHITE	A	E-15	< LOD	0.03
778	1/25/2010	1	WALL/MIDDLE	DRYWALL	WHITE	B	E-15	< LOD	0.03
779	1/25/2010	1	WALL/MIDDLE	DRYWALL	WHITE	C	E-15	< LOD	0.03
780	1/25/2010	6	WALL/MIDDLE	DRYWALL	WHITE	A	E-15	< LOD	0.03
781	1/25/2010	6	WALL/MIDDLE	DRYWALL	WHITE	B	E-15	< LOD	0.03

Table 2
XRF Data

Sample #	Sample Date	Sample Location[1]	Component	Substrate	Color	Wall	Unit Number	XRF Reading (mg/cm2)	XRF Error (mg/cm2)
782	1/25/2010	6	WALL/MIDDLE	DRYWALL	WHITE	C	E-15	< LOD	0.03
783	1/25/2010	6	WALL/MIDDLE	DRYWALL	WHITE	D	E-15	< LOD	0.03
784	1/25/2010	7	WALL/MIDDLE	DRYWALL	WHITE	D	E-15	< LOD	0.03
785	1/25/2010	7	WALL/MIDDLE	DRYWALL	WHITE	C	E-15	< LOD	0.03
786	1/25/2010	7	WALL/MIDDLE	DRYWALL	WHITE	B	E-15	< LOD	0.03
787	1/25/2010	7	WALL/MIDDLE	DRYWALL	WHITE	A	E-15	< LOD	0.03
788	1/25/2010	8	WALL/MIDDLE	DRYWALL	WHITE	A	E-15	< LOD	0.03
789	1/25/2010	8	WALL/MIDDLE	DRYWALL	WHITE	B	E-15	< LOD	0.03
790	1/25/2010	8	WALL/MIDDLE	DRYWALL	WHITE	C	E-15	< LOD	0.03
791	1/25/2010	9	WALL/MIDDLE	DRYWALL	WHITE	A	E-15	< LOD	0.03
792	1/25/2010	9	WALL/MIDDLE	DRYWALL	WHITE	B	E-15	< LOD	0.03
793	1/25/2010	9	WALL/MIDDLE	DRYWALL	WHITE	C	E-15	< LOD	0.03
794	1/25/2010	9	WALL/MIDDLE	DRYWALL	WHITE	D	E-15	< LOD	0.03
795	1/25/2010	10	WALL/MIDDLE	DRYWALL	WHITE	D	E-15	< LOD	0.03
796	1/25/2010	10	WALL/MIDDLE	DRYWALL	WHITE	C	E-15	< LOD	0.03
797	1/25/2010	10	WALL/MIDDLE	DRYWALL	WHITE	B	E-15	< LOD	0.03

Table 2
XRF Data

Sample #	Sample Date	Sample Location[1]	Component	Substrate	Color	Wall	Unit Number	XRF Reading (mg/cm2)	XRF Error (mg/cm2)
798	1/25/2010	10	WALL/MIDDLE	DRYWALL	WHITE	A	E-15	< LOD	0.03
799	1/25/2010	10	CEILING	DRYWALL	WHITE		E-15	< LOD	0.03
800	1/25/2010	9	CEILING	DRYWALL	WHITE		E-15	< LOD	0.03
801	1/25/2010	8	CEILING	DRYWALL	WHITE		E-15	< LOD	0.03
802	1/25/2010	7	CEILING	DRYWALL	WHITE		E-15	< LOD	0.03
803	1/25/2010	6	CEILING	DRYWALL	WHITE		E-15	< LOD	0.03
804	1/25/2010	1	CEILING	DRYWALL	WHITE		E-15	< LOD	0.03
805	1/25/2010	6	CLST SHELF	WOOD	BROWN	D	E-15	< LOD	0.06
806	1/25/2010	7	CLST SHELF	WOOD	VARNISH	A	E-15	< LOD	0.03
807	1/25/2010	10	CLST SHELF	WOOD	VARNISH	B	E-15	< LOD	0.03
808	1/25/2010	10	BASEBOARD	WOOD	VARNISH	C	E-15	< LOD	0.03
809	1/25/2010	7	BASEBOARD	WOOD	VARNISH	C	E-15	< LOD	0.03
810	1/25/2010	6	BASEBOARD	WOOD	VARNISH	C	E-15	< LOD	0.03
811	1/25/2010	7	CLST DOOR	WOOD	VARNISH	A	E-15	< LOD	0.03
812	1/25/2010	6	CLST DOOR	WOOD	VARNISH	D	E-15	< LOD	0.03
813	1/25/2010	10	CLST DOOR	WOOD	VARNISH	B	E-15	< LOD	0.03

Table 2
XRF Data

Sample #	Sample Date	Sample Location[1]	Component	Substrate	Color	Wall	Unit Number	XRF Reading (mg/cm2)	XRF Error (mg/cm2)
814	1/25/2010	6	DOOR	WOOD	VARNISH	A	E-15	< LOD	0.03
815	1/25/2010	6	DR. TRIM	WOOD	VARNISH	D	E-15	< LOD	0.03
816	1/25/2010	6	DR. CASING LF	WOOD	VARNISH	C	E-15	< LOD	0.03
817	1/25/2010	7	WNDW TRIM	WOOD	VARNISH	C	E-15	< LOD	0.03
818	1/25/2010	10	WNDW TRIM	WOOD	VARNISH	A	E-15	< LOD	0.03
819	1/25/2010	10	RADIATOR	METAL	GREY	A	E-15	< LOD	0.03
820	1/25/2010	7	RADIATOR	METAL	GREY	C	E-15	< LOD	0.03
821	1/25/2010	8	CBNT FRONT	WOOD	VARNISH	C	E-15	< LOD	0.03
822	1/25/2010	9	DOOR	WOOD	VARNISH	C	E-15	< LOD	0.03
823	1/25/2010	9	DR. TRIM	WOOD	VARNISH	C	E-15	< LOD	0.03
824	1/25/2010	1	STR RAIL CAP	WOOD	VARNISH	C	E-15	< LOD	0.08
825	1/25/2010	1	STR HAND RAIL	WOOD	VARNISH	B	E-15	< LOD	0.03
826	1/25/2010	SHUTTER CAL						10.01	0
827	1/25/2010	1	STR BASEBOARD	WOOD	WHITE	B	E-15	< LOD	0.03
828	1/25/2010	1	DOOR	METAL	WHITE	A	E-15	< LOD	0.28
829	1/25/2010	1	DR. TRIM	WOOD	VARNISH	A	E-15	< LOD	0.03

Table 2
XRF Data

Sample #	Sample Date	Sample Location[1]	Component	Substrate	Color	Wall	Unit Number	XRF Reading (mg/cm2)	XRF Error (mg/cm2)
830	1/25/2010	PORCH REAR	DR. TRIM	WOOD	WHITE	A	E-15	< LOD	0.04
831	1/25/2010	PORCH REAR	WNDW TRIM	WOOD	WHITE	A	E-15	< LOD	0.03
832	1/25/2010	PORCH REAR	DOOR	METAL	GREEN	A	E-15	< LOD	0.15
833	1/25/2010	PORCH REAR	DOOR	WOOD	GREY	D	E-15	< LOD	1.33
2305	1/25/2010	PORCH REAR	DOOR	WOOD	GREY	D	E-15	0.4	0.2
834	1/25/2010	PORCH REAR	PORCH SIDING	WOOD	GREY	D	E-15	< LOD	0.03
835	1/25/2010	PORCH REAR	PORCH SIDING	WOOD	GREY	A	E-15	< LOD	0.03
836	1/25/2010	PORCH REAR	PORCH CEILING	WOOD	GREY		E-15	< LOD	0.03
837	1/25/2010	SRM2572	CALIBRATE - FRONT					1.5	0.3
838	1/25/2010	1	WALL/MIDDLE	DRYWALL	WHITE	A	G-22	0	0.02
839	1/25/2010	1	WALL/MIDDLE	DRYWALL	WHITE	B	G-22	0	0.02
840	1/25/2010	1	WALL/MIDDLE	DRYWALL	WHITE	C	G-22	0	0.02
841	1/25/2010	1	WALL/MIDDLE	DRYWALL	WHITE	D	G-22	0	0.02
842	1/25/2010	1	WALL/MIDDLE	DRYWALL	WHITE	E	G-22	0	0.02
843	1/25/2010	2	WALL/MIDDLE	WOOD	VARNISH	A	G-22	0.01	0.03
844	1/25/2010	2	WALL/MIDDLE	DRYWALL	WHITE	B	G-22	0	0.02

Table 2
XRF Data

Sample #	Sample Date	Sample Location[1]	Component	Substrate	Color	Wall	Unit Number	XRF Reading (mg/cm2)	XRF Error (mg/cm2)
845	1/25/2010	2	WALL/MIDDLE	DRYWALL	WHITE	C	G-22	0	0.02
846	1/25/2010	2	WALL/MIDDLE	DRYWALL	WHITE	D	G-22	0	0.02
847	1/25/2010	3	WALL/MIDDLE	DRYWALL	WHITE	D	G-22	0	0.02
848	1/25/2010	3	WALL/MIDDLE	DRYWALL	WHITE	C	G-22	0	0.02
849	1/25/2010	3	WALL/MIDDLE	DRYWALL	WHITE	B	G-22	0	0.02
850	1/25/2010	3	WALL/MIDDLE	DRYWALL	WHITE	A	G-22	0	0.02
851	1/25/2010	4	WALL/MIDDLE	DRYWALL	WHITE	A	G-22	0	0.02
852	1/25/2010	4	WALL/MIDDLE	DRYWALL	WHITE	B	G-22	0.01	0.05
853	1/25/2010	4	WALL/MIDDLE	DRYWALL	WHITE	C	G-22	0	0.02
854	1/25/2010	4	WALL/MIDDLE	DRYWALL	WHITE	D	G-22	0	0.02
855	1/25/2010	5	WALL/MIDDLE	DRYWALL	WHITE	D	G-22	0	0.02
856	1/25/2010	5	WALL/MIDDLE	DRYWALL	WHITE	B	G-22	0	0.02
857	1/25/2010	5	WALL/MIDDLE	DRYWALL	WHITE	A	G-22	0	0.02
858	1/25/2010	6	WALL/MIDDLE	DRYWALL	WHITE	A	G-22	0	0.02
859	1/25/2010	6	WALL/MIDDLE	DRYWALL	WHITE	B	G-22	0	0.02
860	1/25/2010	6	WALL/MIDDLE	DRYWALL	WHITE	C	G-22	0	0.02

Table 2
XRF Data

Sample #	Sample Date	Sample Location[1]	Component	Substrate	Color	Wall	Unit Number	XRF Reading (mg/cm2)	XRF Error (mg/cm2)
861	1/25/2010	6	WALL/MIDDLE	DRYWALL	WHITE	D	G-22	0	0.02
862	1/25/2010	7	WALL/MIDDLE	DRYWALL	WHITE	D	G-22	0	0.02
863	1/25/2010	7	WALL/MIDDLE	DRYWALL	WHITE	C	G-22	0	0.02
864	1/25/2010	7	WALL/MIDDLE	DRYWALL	WHITE	B	G-22	0	0.02
865	1/25/2010	7	WALL/MIDDLE	DRYWALL	WHITE	A	G-22	0.01	0.05
866	1/25/2010	8	WALL/MIDDLE	DRYWALL	WHITE	A	G-22	0	0.02
867	1/25/2010	8	WALL/MIDDLE	DRYWALL	WHITE	B	G-22	0	0.02
868	1/25/2010	8	WALL/MIDDLE	DRYWALL	WHITE	C	G-22	0	0.02
869	1/25/2010	8	WALL/MIDDLE	DRYWALL	WHITE	D	G-22	0	0.02
870	1/25/2010	9	WALL/MIDDLE	DRYWALL	WHITE	D	G-22	0	0.02
871	1/25/2010	9	WALL/MIDDLE	DRYWALL	WHITE	C	G-22	0	0.02
872	1/25/2010	9	WALL/MIDDLE	DRYWALL	WHITE	B	G-22	0	0.02
873	1/25/2010	9	WALL/MIDDLE	DRYWALL	WHITE	A	G-22	0	0.02
874	1/25/2010	9	CEILING	DRYWALL	WHITE		G-22	0	0.02
875	1/25/2010	8	CEILING	DRYWALL	WHITE		G-22	0	0.02
876	1/25/2010	SHUTTER CAL						9.35	0

Table 2
XRF Data

Sample #	Sample Date	Sample Location[1]	Component	Substrate	Color	Wall	Unit Number	XRF Reading (mg/cm2)	XRF Error (mg/cm2)
877	1/25/2010	7	CEILING	DRYWALL	WHITE		G-22	< LOD	0.03
878	1/25/2010	6	CEILING	DRYWALL	WHITE		G-22	< LOD	0.03
879	1/25/2010	5	CEILING	DRYWALL	WHITE		G-22	< LOD	0.03
880	1/25/2010	4	CEILING	DRYWALL	WHITE		G-22	< LOD	0.03
881	1/25/2010	3	CEILING	DRYWALL	WHITE		G-22	< LOD	0.04
882	1/25/2010	2	CEILING	DRYWALL	WHITE		G-22	< LOD	0.03
883	1/25/2010	1	CEILING	DRYWALL	WHITE		G-22	< LOD	0.03
884	1/25/2010	1	CLST SHELF	WOOD	VARNISH	E	G-22	< LOD	0.03
885	1/25/2010	3	CLST SHELF	WOOD	VARNISH	D	G-22	< LOD	0.03
886	1/25/2010	7	CLST SHELF	WOOD	VARNISH	B	G-22	< LOD	0.03
887	1/25/2010	8	CLST SHELF	WOOD	VARNISH	B	G-22	< LOD	0.03
888	1/25/2010	9	CLST SHELF	WOOD	BROWN	B	G-22	< LOD	0.03
889	1/25/2010	9	CLST DOOR	WOOD	VARNISH	B	G-22	< LOD	0.03
890	1/25/2010	8	CLST DOOR	WOOD	VARNISH	B	G-22	< LOD	0.03
891	1/25/2010	7	CLST DOOR	WOOD	VARNISH	B	G-22	< LOD	0.03
892	1/25/2010	3	CLST DOOR	WOOD	VARNISH	D	G-22	< LOD	0.03

Table 2
XRF Data

Sample #	Sample Date	Sample Location[1]	Component	Substrate	Color	Wall	Unit Number	XRF Reading (mg/cm2)	XRF Error (mg/cm2)
893	1/25/2010	1	CLST DOOR	WOOD	VARNISH	E	G-22	< LOD	0.03
894	1/25/2010	1	DOOR	WOOD	VARNISH	B	G-22	< LOD	0.03
895	1/25/2010	1	DR. TRIM	WOOD	VARNISH	C	G-22	< LOD	0.09
896	1/25/2010	1	DR. CASING LF	WOOD	VARNISH	D	G-22	< LOD	0.05
897	1/25/2010	5	DR. CASING LF	WOOD	VARNISH	A	G-22	< LOD	0.03
898	1/25/2010	5	DOOR	WOOD	VARNISH	A	G-22	< LOD	0.03
899	1/25/2010	7	DOOR	WOOD	VARNISH	B	G-22	< LOD	0.03
900	1/25/2010	7	DR. TRIM	WOOD	VARNISH	B	G-22	< LOD	0.03
901	1/25/2010	7	DR. CASING LF	WOOD	VARNISH	A	G-22	< LOD	0.03
902	1/25/2010	1	DOOR	METAL	WHITE	A	G-22	< LOD	0.13
903	1/25/2010	1	DR. TRIM	WOOD	VARNISH	A	G-22	< LOD	0.03
904	1/25/2010	1	BASEBOARD	WOOD	VARNISH	E	G-22	< LOD	0.05
905	1/25/2010	2	BASEBOARD	WOOD	VARNISH	C	G-22	< LOD	0.03
906	1/25/2010	6	BASEBOARD	WOOD	VARNISH	C	G-22	< LOD	0.03
907	1/25/2010	7	BASEBOARD	WOOD	VARNISH	A	G-22	< LOD	0.03
908	1/25/2010	8	BASEBOARD	WOOD	VARNISH	A	G-22	< LOD	0.03

Table 2
XRF Data

Sample #	Sample Date	Sample Location[1]	Component	Substrate	Color	Wall	Unit Number	XRF Reading (mg/cm2)	XRF Error (mg/cm2)
909	1/25/2010	9	BASEBOARD	WOOD	VARNISH	A	G-22	< LOD	0.03
910	1/25/2010	9	WNDW TRIM	WOOD	VARNISH	D	G-22	< LOD	0.03
911	1/25/2010	8	WNDW TRIM	WOOD	VARNISH	D	G-22	< LOD	0.03
912	1/25/2010	7	WNDW TRIM	WOOD	VARNISH	D	G-22	< LOD	0.03
913	1/25/2010	3	WNDW TRIM	WOOD	VARNISH	B	G-22	< LOD	0.03
914	1/25/2010	2	WNDW TRIM	WOOD	VARNISH	B	G-22	< LOD	0.03
915	1/25/2010	2	DR. TRIM	WOOD	VARNISH	B	G-22	< LOD	0.03
916	1/25/2010	2	DOOR	METAL	WHITE	B	G-22	< LOD	0.03
917	1/25/2010	3	CBNT FRONT	WOOD	VARNISH	B	G-22	< LOD	0.03
918	1/25/2010	4	CBNT FRONT	WOOD	VARNISH	B	G-22	< LOD	0.03
919	1/25/2010	9	RADIATOR	METAL	GREY	D	G-22	< LOD	0.03
920	1/25/2010	8	RADIATOR	METAL	GREY	D	G-22	< LOD	0.03
921	1/25/2010	7	RADIATOR	METAL	GREY	D	G-22	< LOD	0.03
922	1/25/2010	2	RADIATOR	METAL	GREY	B	G-22	< LOD	0.03
923	1/25/2010	1	RADIATOR	METAL	GREY	E	G-22	< LOD	0.03
924	1/25/2010	PORCH REAR	DOOR	METAL	PURPLE	D	G-22	< LOD	0.27

Table 2
XRF Data

Sample #	Sample Date	Sample Location[1]	Component	Substrate	Color	Wall	Unit Number	XRF Reading (mg/cm2)	XRF Error (mg/cm2)
925	1/25/2010	PORCH REAR	DOOR	WOOD	GREY	C	G-22	< LOD	0.03
926	1/25/2010	PORCH REAR	DR. TRIM	WOOD	WHITE	C	G-22	< LOD	0.03
927	1/25/2010	PORCH REAR	WNDW TRIM	WOOD	WHITE	D	G-22	< LOD	0.03
928	1/25/2010	PORCH REAR	PORCH RAIL CAP	WOOD	WHITE	A	G-22	< LOD	0.03
929	1/25/2010	PORCH REAR	PORCH BALUSTER	WOOD	GREY	B	G-22	< LOD	0.03
930	1/25/2010	SHUTTER CAL						10.39	0
931	1/25/2010	PORCH REAR	PORCH SIDING	WOOD	GREY	A	G-22	< LOD	0.03
932	1/25/2010	PORCH REAR	PORCH SIDING	WOOD	GREY	B	G-22	< LOD	0.03
933	1/25/2010	PORCH REAR	PORCH SIDING	WOOD	GREY	C	G-22	< LOD	0.03
934	1/25/2010	PORCH REAR	PORCH SIDING	WOOD	GREY	D	G-22	< LOD	0.03
935	1/25/2010	PORCH REAR	PORCH CEILING	WOOD	GREY		G-22	< LOD	0.03
936	1/25/2010	SRM2573	CALIBRATE - FRONT					1	0.1
937	1/25/2010	1	WALL/MIDDLE	DRYWALL	WHITE	A	J-27	0	0.02
938	1/25/2010	1	WALL/MIDDLE	DRYWALL	WHITE	B	J-27	0	0.02
939	1/25/2010	1	WALL/MIDDLE	DRYWALL	WHITE	C	J-27	0	0.02
940	1/25/2010	1	WALL/MIDDLE	DRYWALL	WHITE	E	J-27	0	0.02

Table 2
XRF Data

Sample #	Sample Date	Sample Location[1]	Component	Substrate	Color	Wall	Unit Number	XRF Reading (mg/cm2)	XRF Error (mg/cm2)
941	1/25/2010	2	WALL/MIDDLE	DRYWALL	WHITE	A	J-27	0	0.02
942	1/25/2010	2	WALL/MIDDLE	DRYWALL	WHITE	B	J-27	0	0.02
943	1/25/2010	2	WALL/MIDDLE	DRYWALL	WHITE	C	J-27	0	0.02
944	1/25/2010	2	WALL/MIDDLE	DRYWALL	WHITE	D	J-27	0	0.02
945	1/25/2010	3	WALL/MIDDLE	DRYWALL	WHITE	D	J-27	0.01	0.03
946	1/25/2010	3	WALL/MIDDLE	DRYWALL	WHITE	C	J-27	0	0.02
947	1/25/2010	3	WALL/MIDDLE	DRYWALL	WHITE	B	J-27	0	0.02
948	1/25/2010	3	WALL/MIDDLE	DRYWALL	WHITE	A	J-27	0	0.02
949	1/25/2010	4	WALL/MIDDLE	DRYWALL	WHITE	A	J-27	0	0.02
950	1/25/2010	4	WALL/MIDDLE	DRYWALL	WHITE	B	J-27	0	0.02
951	1/25/2010	4	WALL/MIDDLE	DRYWALL	WHITE	C	J-27	0	0.02
952	1/25/2010	4	WALL/MIDDLE	DRYWALL	WHITE	D	J-27	0	0.02
953	1/25/2010	5	WALL/MIDDLE	DRYWALL	WHITE	D	J-27	0	0.02
954	1/25/2010	5	WALL/MIDDLE	DRYWALL	WHITE	C	J-27	0	0.02
955	1/25/2010	5	WALL/MIDDLE	DRYWALL	WHITE	B	J-27	0	0.02
956	1/25/2010	5	WALL/MIDDLE	DRYWALL	WHITE	A	J-27	0	0.02

Table 2
XRF Data

Sample #	Sample Date	Sample Location[1]	Component	Substrate	Color	Wall	Unit Number	XRF Reading (mg/cm2)	XRF Error (mg/cm2)
957	1/25/2010	6	WALL/MIDDLE	DRYWALL	WHITE	A	J-27	0	0.02
958	1/25/2010	6	WALL/MIDDLE	DRYWALL	WHITE	B	J-27	0	0.02
959	1/25/2010	6	WALL/MIDDLE	DRYWALL	WHITE	D	J-27	0	0.02
960	1/25/2010	7	WALL/MIDDLE	DRYWALL	WHITE	D	J-27	0	0.02
961	1/25/2010	7	WALL/MIDDLE	DRYWALL	WHITE	C	J-27	0	0.02
962	1/25/2010	7	WALL/MIDDLE	DRYWALL	WHITE	B	J-27	0	0.02
963	1/25/2010	7	WALL/MIDDLE	DRYWALL	WHITE	A	J-27	0	0.02
964	1/25/2010	8	WALL/MIDDLE	DRYWALL	WHITE	A	J-27	0	0.02
965	1/25/2010	8	WALL/MIDDLE	DRYWALL	WHITE	B	J-27	0	0.02
966	1/25/2010	8	WALL/MIDDLE	DRYWALL	WHITE	C	J-27	0	0.02
967	1/25/2010	8	WALL/MIDDLE	DRYWALL	WHITE	D	J-27	0	0.02
968	1/25/2010	9	WALL/MIDDLE	DRYWALL	WHITE	D	J-27	0.01	0.06
969	1/25/2010	9	WALL/MIDDLE	DRYWALL	WHITE	C	J-27	0	0.02
970	1/25/2010	9	WALL/MIDDLE	DRYWALL	WHITE	B	J-27	0	0.02
971	1/25/2010	9	WALL/MIDDLE	WOOD	VARNISH	A	J-27	0.01	0.02
972	1/25/2010	9	CEILING	DRYWALL	WHITE		J-27	0	0.02

Table 2
XRF Data

Sample #	Sample Date	Sample Location[1]	Component	Substrate	Color	Wall	Unit Number	XRF Reading (mg/cm2)	XRF Error (mg/cm2)
973	1/25/2010	8	CEILING	DRYWALL	WHITE		J-27	0	0.02
974	1/25/2010	7	CEILING	DRYWALL	WHITE		J-27	0	0.02
975	1/25/2010	6	CEILING	DRYWALL	WHITE		J-27	0	0.02
976	1/25/2010	5	CEILING	DRYWALL	WHITE		J-27	0	0.02
977	1/25/2010	4	CEILING	DRYWALL	WHITE		J-27	0.01	0.03
978	1/25/2010	3	CEILING	DRYWALL	WHITE		J-27	0	0.02
979	1/25/2010	2	CEILING	DRYWALL	WHITE		J-27	0	0.02
980	1/25/2010	SHUTTER CAL						9.25	0
981	1/25/2010	1	CEILING	DRYWALL	WHITE		J-27	< LOD	0.03
982	1/25/2010	1	CLST SHELF	WOOD	VARNISH	B	J-27	< LOD	0.03
983	1/25/2010	2	CLST SHELF	WOOD	BROWN	D	J-27	< LOD	0.03
984	1/25/2010	3	CLST SHELF	WOOD	BROWN	D	J-27	< LOD	0.04
985	1/25/2010	4	CLST SHELF	WOOD	VARNISH	D	J-27	< LOD	0.03
986	1/25/2010	8	CLST SHELF	WOOD	VARNISH	B	J-27	< LOD	0.03
987	1/25/2010	8	CLST DOOR	WOOD	VARNISH	B	J-27	< LOD	0.03
988	1/25/2010	4	CLST DOOR	WOOD	VARNISH	D	J-27	< LOD	0.03

Table 2
XRF Data

Sample #	Sample Date	Sample Location[1]	Component	Substrate	Color	Wall	Unit Number	XRF Reading (mg/cm2)	XRF Error (mg/cm2)
989	1/25/2010	3	CLST DOOR	WOOD	VARNISH	D	J-27	< LOD	0.03
990	1/25/2010	2	CLST DOOR	WOOD	VARNISH	D	J-27	< LOD	0.03
991	1/25/2010	1	CLST DOOR	WOOD	VARNISH	B	J-27	< LOD	0.03
992	1/25/2010	1	BASEBOARD	WOOD	VARNISH	B	J-27	< LOD	0.03
993	1/25/2010	2	BASEBOARD	WOOD	VARNISH	B	J-27	< LOD	0.03
994	1/25/2010	3	BASEBOARD	WOOD	VARNISH	B	J-27	< LOD	0.03
995	1/25/2010	4	BASEBOARD	WOOD	VARNISH	B	J-27	< LOD	0.03
996	1/25/2010	5	BASEBOARD	WOOD	VARNISH	B	J-27	< LOD	0.03
997	1/25/2010	9	BASEBOARD	WOOD	VARNISH	B	J-27	< LOD	0.03
998	1/25/2010	9	DR. TRIM	WOOD	VARNISH	D	J-27	< LOD	0.03
999	1/25/2010	9	DOOR	METAL	WHITE	D	J-27	< LOD	0.06
1000	1/25/2010	1	DOOR	METAL	WHITE	A	J-27	< LOD	0.07
1001	1/25/2010	1	DOOR	WOOD	VARNISH	C	J-27	< LOD	0.03
1002	1/25/2010	1	DR. TRIM	WOOD	VARNISH	D	J-27	< LOD	0.03
1003	1/25/2010	1	DR. CASING LF	WOOD	VARNISH	E	J-27	< LOD	0.03
1004	1/25/2010	4	DR. CASING LF	WOOD	VARNISH	A	J-27	< LOD	0.03

Table 2
XRF Data

Sample #	Sample Date	Sample Location[1]	Component	Substrate	Color	Wall	Unit Number	XRF Reading (mg/cm2)	XRF Error (mg/cm2)
1005	1/25/2010	4	DOOR	WOOD	VARNISH	D	J-27	< LOD	0.03
1006	1/25/2010	4	DR. TRIM	WOOD	VARNISH	D	J-27	< LOD	0.03
1007	1/25/2010	6	DR. TRIM	WOOD	VARNISH	A	J-27	< LOD	0.03
1008	1/25/2010	6	DOOR	WOOD	VARNISH	A	J-27	< LOD	0.03
1009	1/25/2010	7	CBNT FRONT	WOOD	VARNISH	D	J-27	< LOD	0.03
1010	1/25/2010	8	CBNT FRONT	WOOD	VARNISH	D	J-27	< LOD	0.03
1011	1/25/2010	8	WNDW TRIM	WOOD	VARNISH	D	J-27	< LOD	0.03
1012	1/25/2010	9	WNDW TRIM	WOOD	VARNISH	D	J-27	< LOD	0.03
1013	1/25/2010	2	WNDW TRIM	WOOD	VARNISH	B	J-27	< LOD	0.03
1014	1/25/2010	3	WNDW TRIM	WOOD	VARNISH	B	J-27	< LOD	0.03
1015	1/25/2010	4	WNDW TRIM	WOOD	VARNISH	B	J-27	< LOD	0.03
1016	1/25/2010	4	RADIATOR	METAL	GREY	B	J-27	< LOD	0.03
1017	1/25/2010	3	RADIATOR	METAL	GREY	B	J-27	< LOD	0.03
1018	1/25/2010	2	RADIATOR	METAL	GREY	B	J-27	< LOD	0.03
1019	1/25/2010	1	RADIATOR	METAL	GREY	B	J-27	< LOD	0.03
1020	1/25/2010	9	RADIATOR	METAL	GREY	D	J-27	< LOD	0.03

Table 2
XRF Data

Sample #	Sample Date	Sample Location[1]	Component	Substrate	Color	Wall	Unit Number	XRF Reading (mg/cm2)	XRF Error (mg/cm2)
1021	1/25/2010	PORCH REAR	DOOR	METAL	PURPLE	B	J-27	< LOD	0.03
1022	1/25/2010	PORCH REAR	DOOR	WOOD	GREY	C	J-27	< LOD	0.03
1023	1/25/2010	PORCH REAR	DR. TRIM	WOOD	WHITE	C	J-27	< LOD	0.03
1024	1/25/2010	PORCH REAR	PORCH SUP COLUMN	WOOD	WHITE	A	J-27	< LOD	0.03
1025	1/25/2010	PORCH REAR	WNDW TRIM	WOOD	WHITE	B	J-27	< LOD	0.04
1026	1/25/2010	PORCH REAR	PORCH SIDING	WOOD	GREY	A	J-27	< LOD	0.03
1027	1/25/2010	PORCH REAR	PORCH SIDING	WOOD	GREY	B	J-27	< LOD	0.03
1028	1/25/2010	PORCH REAR	PORCH SIDING	WOOD	GREY	C	J-27	< LOD	0.03
1029	1/25/2010	PORCH REAR	PORCH CEILING	WOOD	GREY		J-27	< LOD	0.03
1030	1/25/2010	SRM2574	CALIBRATE - FRONT					0.7	0.1
1031	1/25/2010	SHUTTER CAL						9.33	0
1032	1/25/2010	1	WALL/MIDDLE	DRYWALL	WHITE	B	A-2	< LOD	0.03
1033	1/25/2010	1	WALL/MIDDLE	DRYWALL	WHITE	C	A-2	< LOD	0.04
1034	1/25/2010	1	WALL/MIDDLE	DRYWALL	WHITE	D	A-2	< LOD	0.03
1035	1/25/2010	1	WALL/MIDDLE	DRYWALL	WHITE	E	A-2	< LOD	0.03
1036	1/25/2010	2	WALL/MIDDLE	DRYWALL	WHITE	A	A-2	< LOD	0.03

Table 2
XRF Data

Sample #	Sample Date	Sample Location[1]	Component	Substrate	Color	Wall	Unit Number	XRF Reading (mg/cm2)	XRF Error (mg/cm2)
1037	1/25/2010	2	WALL/MIDDLE	DRYWALL	WHITE	B	A-2	< LOD	0.03
1038	1/25/2010	2	WALL/MIDDLE	DRYWALL	WHITE	C	A-2	< LOD	0.03
1039	1/25/2010	2	WALL/MIDDLE	DRYWALL	WHITE	D	A-2	< LOD	0.07
1040	1/25/2010	3	WALL/MIDDLE	DRYWALL	WHITE	D	A-2	< LOD	0.03
1041	1/25/2010	3	WALL/MIDDLE	DRYWALL	WHITE	C	A-2	< LOD	0.04
1042	1/25/2010	3	WALL/MIDDLE	DRYWALL	WHITE	B	A-2	< LOD	0.05
1043	1/25/2010	3	WALL/MIDDLE	DRYWALL	WHITE	A	A-2	< LOD	0.03
1044	1/25/2010	4	WALL/MIDDLE	DRYWALL	WHITE	A	A-2	< LOD	0.03
1045	1/25/2010	4	WALL/MIDDLE	DRYWALL	WHITE	B	A-2	< LOD	0.03
1046	1/25/2010	4	WALL/MIDDLE	DRYWALL	WHITE	D	A-2	< LOD	0.03
1047	1/25/2010	5	WALL/MIDDLE	DRYWALL	WHITE	D	A-2	< LOD	0.03
1048	1/25/2010	5	WALL/MIDDLE	DRYWALL	WHITE	C	A-2	< LOD	0.03
1049	1/25/2010	5	WALL/MIDDLE	DRYWALL	WHITE	B	A-2	< LOD	0.06
1050	1/25/2010	5	WALL/MIDDLE	DRYWALL	WHITE	A	A-2	< LOD	0.03
1051	1/25/2010	6	WALL/MIDDLE	DRYWALL	WHITE	A	A-2	< LOD	0.03
1052	1/25/2010	6	WALL/MIDDLE	DRYWALL	WHITE	B	A-2	< LOD	0.03

Table 2
XRF Data

Sample #	Sample Date	Sample Location[1]	Component	Substrate	Color	Wall	Unit Number	XRF Reading (mg/cm2)	XRF Error (mg/cm2)
1053	1/25/2010	6	WALL/MIDDLE	DRYWALL	WHITE	C	A-2	< LOD	0.03
1054	1/25/2010	6	WALL/MIDDLE	DRYWALL	WHITE	D	A-2	< LOD	0.03
1055	1/25/2010	7	WALL/MIDDLE	DRYWALL	WHITE	D	A-2	< LOD	0.03
1056	1/25/2010	7	WALL/MIDDLE	DRYWALL	WHITE	C	A-2	< LOD	0.03
1057	1/25/2010	7	WALL/MIDDLE	DRYWALL	WHITE	B	A-2	< LOD	0.03
1058	1/25/2010	7	WALL/MIDDLE	WOOD	VARNISH	A	A-2	< LOD	0.09
1059	1/25/2010	7	CEILING	DRYWALL	WHITE	A	A-2	< LOD	0.03
1060	1/25/2010	6	CEILING	DRYWALL	WHITE		A-2	< LOD	0.03
1061	1/25/2010	5	CEILING	DRYWALL	WHITE		A-2	< LOD	0.03
1062	1/25/2010	4	CEILING	DRYWALL	WHITE		A-2	< LOD	0.04
1063	1/25/2010	3	CEILING	DRYWALL	WHITE		A-2	< LOD	0.06
1064	1/25/2010	2	CEILING	DRYWALL	WHITE		A-2	< LOD	0.05
1065	1/25/2010	1	CEILING	DRYWALL	WHITE		A-2	< LOD	0.03
1066	1/25/2010	1	CLST SHELF	WOOD	BROWN	B	A-2	< LOD	0.03
1067	1/25/2010	2	CLST SHELF	WOOD	BROWN	D	A-2	< LOD	0.03
1068	1/25/2010	3	CLST SHELF	WOOD	BROWN	D	A-2	< LOD	0.03

Table 2
XRF Data

Sample #	Sample Date	Sample Location[1]	Component	Substrate	Color	Wall	Unit Number	XRF Reading (mg/cm2)	XRF Error (mg/cm2)
1069	1/25/2010	3	CLST DOOR	WOOD	VARNISH	D	A-2	< LOD	0.03
1070	1/25/2010	2	CLST DOOR	WOOD	VARNISH	D	A-2	< LOD	0.03
1071	1/25/2010	1	CLST DOOR	WOOD	VARNISH	B	A-2	< LOD	0.03
1072	1/25/2010	1	BASEBOARD	WOOD	VARNISH	B	A-2	< LOD	0.03
1073	1/25/2010	2	BASEBOARD	WOOD	VARNISH	B	A-2	< LOD	0.03
1074	1/25/2010	3	BASEBOARD	WOOD	VARNISH	B	A-2	< LOD	0.03
1075	1/25/2010	7	BASEBOARD	WOOD	VARNISH	C	A-2	< LOD	0.03
1076	1/25/2010	6	CLST SHELF	WOOD	VARNISH	B	A-2	< LOD	0.03
1077	1/25/2010	6	CLST DOOR	WOOD	VARNISH	B	A-2	< LOD	0.03
1078	1/25/2010	6	CBNT FRONT	WOOD	VARNISH	D	A-2	< LOD	0.1
1079	1/25/2010	5	CBNT FRONT	WOOD	VARNISH	D	A-2	< LOD	0.03
1080	1/25/2010	SHUTTER CAL						9.81	0
1081	1/25/2010	7	DOOR	METAL	WHITE	D	A-2	< LOD	0.06
1082	1/25/2010	7	DR. TRIM	WOOD	VARNISH	D	A-2	< LOD	0.03
1083	1/25/2010	1	DR. TRIM	WOOD	VARNISH	A	A-2	< LOD	0.03
1084	1/25/2010	1	DOOR	METAL	WHITE	A	A-2	< LOD	0.03

Table 2
XRF Data

Sample #	Sample Date	Sample Location[1]	Component	Substrate	Color	Wall	Unit Number	XRF Reading (mg/cm2)	XRF Error (mg/cm2)
1085	1/25/2010	1	DOOR	WOOD	VARNISH	C	A-2	< LOD	0.03
1086	1/25/2010	1	DR. TRIM	WOOD	VARNISH	C	A-2	< LOD	0.03
1087	1/25/2010	1	DR. CASING LF	WOOD	VARNISH	E	A-2	< LOD	0.03
1088	1/25/2010	4	DOOR	WOOD	VARNISH	A	A-2	< LOD	0.03
1089	1/25/2010	4	DR. TRIM	WOOD	VARNISH	A	A-2	< LOD	0.03
1090	1/25/2010	2	WNDW TRIM	WOOD	VARNISH	B	A-2	< LOD	0.03
1091	1/25/2010	3	WNDW TRIM	WOOD	VARNISH	B	A-2	< LOD	0.03
1092	1/25/2010	6	WNDW TRIM	WOOD	VARNISH	D	A-2	< LOD	0.03
1093	1/25/2010	7	WNDW TRIM	WOOD	VARNISH	D	A-2	< LOD	0.03
1094	1/25/2010	7	RADIATOR	METAL	GREY	D	A-2	< LOD	0.03
1095	1/25/2010	1	RADIATOR	METAL	WHITE	B	A-2	< LOD	0.03
1096	1/25/2010	2	RADIATOR	METAL	GREY	B	A-2	< LOD	0.03
1097	1/25/2010	3	RADIATOR	METAL	GREY	B	A-2	< LOD	0.03
1098	1/25/2010	3	CLST DR TRIM	WOOD	VARNISH	D	A-2	0	0.02
1099	1/25/2010	3	RADIATOR	METAL	GREY	B	A-2	0	0.02
1100	1/25/2010	PORCH REAR	DOOR	METAL	BLUE	B	A-2	0.02	0.06

Table 2
XRF Data

Sample #	Sample Date	Sample Location[1]	Component	Substrate	Color	Wall	Unit Number	XRF Reading (mg/cm2)	XRF Error (mg/cm2)
1101	1/25/2010	PORCH REAR	DR. TRIM	WOOD	WHITE	B	A-2	0	0.02
1102	1/25/2010	PORCH REAR	WNDW TRIM	WOOD	WHITE	B	A-2	0	0.02
1103	1/25/2010	PORCH REAR	DOOR	WOOD	GREY	C	A-2	0	0.02
1104	1/25/2010	PORCH REAR	PORCH CEILING	WOOD	GREY		A-2	0	0.02
1105	1/25/2010	PORCH REAR	PORCH RAIL CAP	WOOD	GREY		A-2	0	0.02
1106	1/25/2010	PORCH REAR	PORCH BALUSTER	WOOD	GREY		A-2	0	0.02
1107	1/25/2010	PORCH REAR	PORCH SIDING	WOOD	GREY	A	A-2	0	0.02
1108	1/25/2010	PORCH REAR	PORCH SIDING	WOOD	GREY	B	A-2	0.01	0.04
1109	1/25/2010	PORCH REAR	PORCH SIDING	WOOD	GREY	C	A-2	0	0.02
1110	1/25/2010	SRM2575	CALIBRATE - FRONT					0.3	0.06
1111	1/25/2010	2	WALL/MIDDLE	DRYWALL	WHITE	A	B-5	0	0.02
1112	1/25/2010	2	WALL/MIDDLE	DRYWALL	WHITE	B	B-5	0	0.02
1113	1/25/2010	2	WALL/MIDDLE	DRYWALL	WHITE	C	B-5	0.02	0.07
1114	1/25/2010	2	WALL/MIDDLE	DRYWALL	WHITE	D	B-5	0	0.02
1115	1/25/2010	3	WALL/MIDDLE	DRYWALL	WHITE	A	B-5	0	0.02
1116	1/25/2010	3	WALL/MIDDLE	DRYWALL	WHITE	B	B-5	0	0.02

Table 2
XRF Data

Sample #	Sample Date	Sample Location[1]	Component	Substrate	Color	Wall	Unit Number	XRF Reading (mg/cm2)	XRF Error (mg/cm2)
1117	1/25/2010	3	WALL/MIDDLE	DRYWALL	WHITE	C	B-5	0.01	0.05
1118	1/25/2010	3	WALL/MIDDLE	DRYWALL	WHITE	D	B-5	0.01	0.03
1119	1/25/2010	3	WALL/MIDDLE	DRYWALL	WHITE	E	B-5	0	0.02
1120	1/25/2010	4	WALL/MIDDLE	DRYWALL	WHITE	A	B-5	0	0.02
1121	1/25/2010	4	WALL/MIDDLE	DRYWALL	WHITE	B	B-5	0	0.02
1122	1/25/2010	4	WALL/MIDDLE	DRYWALL	WHITE	C	B-5	0	0.02
1123	1/25/2010	4	WALL/MIDDLE	DRYWALL	WHITE	D	B-5	0	0.02
1124	1/25/2010	5	WALL/MIDDLE	DRYWALL	WHITE	A	B-5	0	0.02
1125	1/25/2010	5	WALL/MIDDLE	DRYWALL	WHITE	B	B-5	0.01	0.05
1126	1/25/2010	5	WALL/MIDDLE	DRYWALL	WHITE	C	B-5	0.01	0.03
1127	1/25/2010	5	CEILING	DRYWALL	WHITE		B-5	0	0.02
1128	1/25/2010	SHUTTER CAL						10.35	0
1129	1/25/2010	4	CEILING	DRYWALL	WHITE		B-5	< LOD	0.03
1130	1/25/2010	3	CEILING	DRYWALL	WHITE		B-5	< LOD	0.03
1131	1/25/2010	2	CLST SHELF	WOOD	BROWN	B	B-5	< LOD	0.03
1132	1/25/2010	5	CLST SHELF	WOOD	BROWN	A	B-5	< LOD	0.03

Table 2
XRF Data

Sample #	Sample Date	Sample Location[1]	Component	Substrate	Color	Wall	Unit Number	XRF Reading (mg/cm2)	XRF Error (mg/cm2)
1133	1/25/2010	5	CLST DOOR	WOOD	VARNISH	A	B-5	< LOD	0.09
1134	1/25/2010	2	CLST DOOR	WOOD	VARNISH	D	B-5	< LOD	0.03
1135	1/25/2010	2	BASEBOARD	WOOD	VARNISH	C	B-5	< LOD	0.03
1136	1/25/2010	3	BASEBOARD	WOOD	VARNISH	C	B-5	< LOD	0.04
1137	1/25/2010	5	BASEBOARD	WOOD	VARNISH	C	B-5	< LOD	0.06
1138	1/25/2010	4	CBNT FRONT	WOOD	VARNISH	A	B-5	< LOD	0.03
1139	1/25/2010	4	TRIM	WOOD	VARNISH	C	B-5	< LOD	0.03
1140	1/25/2010	4	WNDW TRIM	WOOD	VARNISH	A	B-5	< LOD	0.03
1141	1/25/2010	3	WNDW TRIM	WOOD	VARNISH	D	B-5	< LOD	0.03
1142	1/25/2010	3	DOOR	METAL	WHITE	D	B-5	< LOD	0.09
1143	1/25/2010	3	DR. TRIM	WOOD	VARNISH	D	B-5	< LOD	0.03
1144	1/25/2010	3	RADIATOR	METAL	GREY	D	B-5	< LOD	0.03
1145	1/25/2010	5	RADIATOR	METAL	GREY	B	B-5	< LOD	0.03
1146	1/25/2010	1	DOOR	METAL	WHITE	A	B-5	< LOD	0.03
1147	1/25/2010	1	DR. TRIM	WOOD	VARNISH	A	B-5	< LOD	0.03
1148	1/25/2010	1	STR HAND RAIL	WOOD	VARNISH	B	B-5	< LOD	0.03

Table 2
XRF Data

Sample #	Sample Date	Sample Location[1]	Component	Substrate	Color	Wall	Unit Number	XRF Reading (mg/cm2)	XRF Error (mg/cm2)
1149	1/25/2010	1	STR RISER	WOOD	VARNISH	C	B-5	< LOD	0.03
1150	1/25/2010	1	STR BASEBOARD	WOOD	WHITE	C	B-5	< LOD	0.07
1151	1/25/2010	1	WALL/MIDDLE	DRYWALL	WHITE	C	B-5	< LOD	0.04
1152	1/25/2010	1	WALL/MIDDLE	DRYWALL	WHITE	B	B-5	< LOD	0.03
1153	1/25/2010	1	WALL/MIDDLE	DRYWALL	WHITE	A	B-5	< LOD	0.03
1154	1/25/2010	1	CEILING	DRYWALL	WHITE	A	B-5	< LOD	0.03
1155	1/25/2010	6	WALL/MIDDLE	DRYWALL	WHITE	A	B-5	< LOD	0.03
1156	1/25/2010	6	WALL/MIDDLE	DRYWALL	WHITE	B	B-5	< LOD	0.07
1157	1/25/2010	6	WALL/MIDDLE	DRYWALL	WHITE	C	B-5	< LOD	0.03
1158	1/25/2010	6	WALL/MIDDLE	DRYWALL	WHITE	D	B-5	< LOD	0.03
1159	1/25/2010	7	WALL/MIDDLE	DRYWALL	WHITE	D	B-5	< LOD	0.07
1160	1/25/2010	7	WALL/MIDDLE	DRYWALL	WHITE	C	B-5	< LOD	0.03
1161	1/25/2010	7	WALL/MIDDLE	DRYWALL	WHITE	B	B-5	< LOD	0.03
1162	1/25/2010	7	WALL/MIDDLE	DRYWALL	WHITE	A	B-5	< LOD	0.03
1163	1/25/2010	8	WALL/MIDDLE	DRYWALL	WHITE	A	B-5	< LOD	0.03
1164	1/25/2010	8	WALL/MIDDLE	DRYWALL	WHITE	B	B-5	< LOD	0.03

Table 2
XRF Data

Sample #	Sample Date	Sample Location[1]	Component	Substrate	Color	Wall	Unit Number	XRF Reading (mg/cm2)	XRF Error (mg/cm2)
1165	1/25/2010	8	WALL/MIDDLE	DRYWALL	WHITE	C	B-5	< LOD	0.03
1166	1/25/2010	8	WALL/MIDDLE	DRYWALL	WHITE	D	B-5	< LOD	0.23
1167	1/25/2010	9	WALL/MIDDLE	DRYWALL	WHITE	A	B-5	< LOD	0.13
1168	1/25/2010	9	WALL/MIDDLE	DRYWALL	WHITE	B	B-5	< LOD	0.03
1169	1/25/2010	9	WALL/MIDDLE	DRYWALL	WHITE	C	B-5	< LOD	0.03
1170	1/25/2010	10	WALL/MIDDLE	DRYWALL	WHITE	A	B-5	< LOD	0.04
1171	1/25/2010	10	WALL/MIDDLE	DRYWALL	WHITE	B	B-5	< LOD	0.08
1172	1/25/2010	10	WALL/MIDDLE	DRYWALL	WHITE	C	B-5	< LOD	0.11
1173	1/25/2010	10	WALL/MIDDLE	DRYWALL	WHITE	D	B-5	< LOD	0.03
1174	1/25/2010	11	WALL/MIDDLE	DRYWALL	WHITE	D	B-5	< LOD	0.06
1175	1/25/2010	11	WALL/MIDDLE	DRYWALL	WHITE	C	B-5	< LOD	0.03
1176	1/25/2010	11	WALL/MIDDLE	DRYWALL	WHITE	B	B-5	< LOD	0.03
1177	1/25/2010	11	WALL/MIDDLE	DRYWALL	WHITE	A	B-5	< LOD	0.04
1178	1/25/2010	SHUTTER CAL						10.71	0
1179	1/25/2010	11	CEILING	DRYWALL	WHITE		B-5	< LOD	0.06
1180	1/25/2010	10	CEILING	DRYWALL	WHITE		B-5	< LOD	0.03

Table 2
XRF Data

Sample #	Sample Date	Sample Location[1]	Component	Substrate	Color	Wall	Unit Number	XRF Reading (mg/cm2)	XRF Error (mg/cm2)
1181	1/25/2010	9	CEILING	DRYWALL	WHITE		B-5	< LOD	0.18
1182	1/25/2010	8	CEILING	DRYWALL	WHITE		B-5	< LOD	0.1
1183	1/25/2010	7	CEILING	DRYWALL	WHITE		B-5	< LOD	0.07
1184	1/25/2010	6	CEILING	DRYWALL	WHITE		B-5	< LOD	0.03
1185	1/25/2010	6	CLST SHELF	WOOD	BROWN	D	B-5	< LOD	0.03
1186	1/25/2010	7	CLST SHELF	WOOD	BROWN	D	B-5	< LOD	0.03
1187	1/25/2010	8	CLST SHELF	WOOD	BROWN	A	B-5	< LOD	0.03
1188	1/25/2010	11	CLST SHELF	WOOD	BROWN	B	B-5	< LOD	0.03
1189	1/25/2010	11	CLST DOOR	WOOD	VARNISH	B	B-5	< LOD	0.03
1190	1/25/2010	8	CLST DOOR	WOOD	VARNISH	A	B-5	< LOD	0.03
1191	1/25/2010	7	CLST DOOR	WOOD	VARNISH	D	B-5	< LOD	0.03
1192	1/25/2010	6	CLST DOOR	WOOD	VARNISH	D	B-5	< LOD	0.03
1193	1/25/2010	6	BASEBOARD	WOOD	VARNISH	B	B-5	< LOD	0.03
1194	1/25/2010	7	BASEBOARD	WOOD	VARNISH	B	B-5	< LOD	0.03
1195	1/25/2010	8	BASEBOARD	WOOD	VARNISH	A	B-5	< LOD	0.03
1196	1/25/2010	11	BASEBOARD	WOOD	VARNISH	D	B-5	< LOD	0.03

Table 2
XRF Data

Sample #	Sample Date	Sample Location[1]	Component	Substrate	Color	Wall	Unit Number	XRF Reading (mg/cm2)	XRF Error (mg/cm2)
1197	1/25/2010	9	CBNT FRONT	WOOD	VARNISH	C	B-5	< LOD	0.03
1198	1/25/2010	10	DOOR	WOOD	VARNISH	C	B-5	< LOD	0.05
1199	1/25/2010	10	DR. TRIM	WOOD	VARNISH	C	B-5	< LOD	0.03
1200	1/25/2010	6	DR. TRIM	WOOD	VARNISH	A	B-5	< LOD	0.03
1201	1/25/2010	6	DOOR	WOOD	VARNISH	C	B-5	< LOD	0.03
1202	1/25/2010	6	DR. CASING LF	WOOD	VARNISH	D	B-5	< LOD	0.03
1203	1/25/2010	11	WNDW TRIM	WOOD	VARNISH	A	B-5	< LOD	0.03
1204	1/25/2010	8	WNDW TRIM	WOOD	VARNISH	C	B-5	< LOD	0.03
1205	1/25/2010	7	WNDW TRIM	WOOD	VARNISH	C	B-5	< LOD	0.03
1206	1/25/2010	7	RADIATOR	METAL	GREY	C	B-5	< LOD	0.03
1207	1/25/2010	8	RADIATOR	METAL	GREY	C	B-5	< LOD	0.03
1208	1/25/2010	11	RADIATOR	METAL	GREY	A	B-5	< LOD	0.03
1209	1/25/2010	PORCH REAR	DR. TRIM	WOOD	WHITE	A	B-5	< LOD	0.03
1210	1/25/2010	PORCH REAR	WNDW TRIM	WOOD	WHITE	A	B-5	< LOD	0.03
1211	1/25/2010	PORCH REAR	DOOR	METAL	GREEN	A	B-5	< LOD	0.14
1212	1/25/2010	PORCH REAR	DOOR	WOOD	GREY	C	B-5	< LOD	0.21

Table 2
XRF Data

Sample #	Sample Date	Sample Location[1]	Component	Substrate	Color	Wall	Unit Number	XRF Reading (mg/cm2)	XRF Error (mg/cm2)
1213	1/25/2010	PORCH REAR	PORCH SIDING	WOOD	GREY	C	B-5	< LOD	0.03
1214	1/25/2010	PORCH REAR	PORCH SIDING	WOOD	GREY	A	B-5	< LOD	0.03
1215	1/25/2010	PORCH REAR	PORCH CEILING	WOOD	GREY		B-5	< LOD	0.03
1216	1/25/2010	SRM2571	CALIBRATE - FRONT					3.9	0.6
1217	1/25/2010	2	WALL/MIDDLE	DRYWALL	WHITE	A	D-11	0	0.02
1218	1/25/2010	2	WALL/MIDDLE	DRYWALL	WHITE	B	D-11	0	0.02
1219	1/25/2010	2	WALL/MIDDLE	DRYWALL	WHITE	C	D-11	0.03	0.11
1220	1/25/2010	2	WALL/MIDDLE	DRYWALL	WHITE	D	D-11	0	0.02
1221	1/25/2010	3	WALL/MIDDLE	DRYWALL	WHITE	A	D-11	0	0.02
1222	1/25/2010	3	WALL/MIDDLE	DRYWALL	WHITE	B	D-11	0	0.02
1223	1/25/2010	3	WALL/MIDDLE	WOOD	VARNISH	C	D-11	0.01	0.03
1224	1/25/2010	3	WALL/MIDDLE	WOOD	VARNISH	E	D-11	0	0.02
1225	1/25/2010	4	WALL/MIDDLE	WOOD	VARNISH	A	D-11	0	0.02
1226	1/25/2010	4	WALL/MIDDLE	WOOD	VARNISH	B	D-11	0	0.02
1227	1/25/2010	4	WALL/MIDDLE	WOOD	VARNISH	C	D-11	0	0.02
1228	1/25/2010	4	WALL/MIDDLE	WOOD	VARNISH	D	D-11	0.02	0.06

Table 2
XRF Data

Sample #	Sample Date	Sample Location[1]	Component	Substrate	Color	Wall	Unit Number	XRF Reading (mg/cm2)	XRF Error (mg/cm2)
1229	1/25/2010	5	WALL/MIDDLE	WOOD	VARNISH	A	D-11	0	0.02
1230	1/25/2010	5	WALL/MIDDLE	WOOD	VARNISH	B	D-11	0	0.02
1231	1/25/2010	5	WALL/MIDDLE	WOOD	VARNISH	C	D-11	0	0.02
1232	1/25/2010	5	CEILING	WOOD	VARNISH		D-11	0	0.02
1233	1/25/2010	4	CEILING	WOOD	VARNISH		D-11	0	0.02
1234	1/25/2010	3	CEILING	WOOD	VARNISH		D-11	0	0.02
1235	1/25/2010	SHUTTER CAL						8.89	0
1236	1/25/2010	2	CLST SHELF	WOOD	VARNISH	B	D-11	< LOD	0.03
1237	1/25/2010	5	CLST SHELF	WOOD	BROWN	A	D-11	< LOD	0.03
1238	1/25/2010	5	CLST DOOR	WOOD	VARNISH	A	D-11	< LOD	0.03
1239	1/25/2010	3	CLST DOOR	WOOD	VARNISH	B	D-11	< LOD	0.03
1240	1/25/2010	3	BASEBOARD	WOOD	VARNISH	B	D-11	< LOD	0.03
1241	1/25/2010	2	BASEBOARD	WOOD	VARNISH	B	D-11	< LOD	0.03
1242	1/25/2010	5	BASEBOARD	WOOD	VARNISH	C	D-11	< LOD	0.03
1243	1/25/2010	5	DR. TRIM	WOOD	VARNISH	A	D-11	< LOD	0.03
1244	1/25/2010	3	DR. TRIM	WOOD	VARNISH	D	D-11	< LOD	0.04

Table 2
XRF Data

Sample #	Sample Date	Sample Location[1]	Component	Substrate	Color	Wall	Unit Number	XRF Reading (mg/cm2)	XRF Error (mg/cm2)
1245	1/25/2010	3	DOOR	METAL	WHITE	D	D-11	< LOD	0.05
1246	1/25/2010	3	WNDW TRIM	WOOD	VARNISH	D	D-11	< LOD	0.03
1247	1/25/2010	4	WNDW TRIM	WOOD	VARNISH	A	D-11	< LOD	0.03
1248	1/25/2010	4	CBNT FRONT	WOOD	VARNISH	C	D-11	< LOD	0.06
1249	1/25/2010	4	TRIM	WOOD	VARNISH	C	D-11	< LOD	0.03
1250	1/25/2010	1	DR. TRIM	WOOD	VARNISH	A	D-11	< LOD	0.03
1251	1/25/2010	1	DOOR	METAL	WHITE	A	D-11	< LOD	0.43
1252	1/25/2010	1	STR HAND RAIL	WOOD	VARNISH	B	D-11	< LOD	0.03
1253	1/25/2010	1	STR RAIL CAP	WOOD	VARNISH	C	D-11	< LOD	0.03
1254	1/25/2010	1	STR BASEBOARD	WOOD	WHITE	C	D-11	< LOD	0.03
1255	1/25/2010	1	CEILING	DRYWALL	WHITE		D-11	< LOD	0.03
1256	1/25/2010	1	WALL/MIDDLE	DRYWALL	WHITE	A	D-11	< LOD	0.03
1257	1/25/2010	1	WALL/MIDDLE	DRYWALL	WHITE	B	D-11	< LOD	0.04
1258	1/25/2010	1	WALL/MIDDLE	DRYWALL	WHITE	C	D-11	< LOD	0.03
1259	1/25/2010	6	WALL/MIDDLE	DRYWALL	WHITE	A	D-11	< LOD	0.03
1260	1/25/2010	6	WALL/MIDDLE	DRYWALL	WHITE	B	D-11	< LOD	0.03

Table 2
XRF Data

Sample #	Sample Date	Sample Location[1]	Component	Substrate	Color	Wall	Unit Number	XRF Reading (mg/cm2)	XRF Error (mg/cm2)
1261	1/25/2010	6	WALL/MIDDLE	DRYWALL	WHITE	C	D-11	< LOD	0.07
1262	1/25/2010	6	WALL/MIDDLE	DRYWALL	WHITE	D	D-11	< LOD	0.03
1263	1/25/2010	7	WALL/MIDDLE	DRYWALL	WHITE	D	D-11	< LOD	0.03
1264	1/25/2010	7	WALL/MIDDLE	DRYWALL	WHITE	C	D-11	< LOD	0.03
1265	1/25/2010	7	WALL/MIDDLE	DRYWALL	WHITE	B	D-11	< LOD	0.03
1266	1/25/2010	7	WALL/MIDDLE	DRYWALL	WHITE	A	D-11	< LOD	0.03
1267	1/25/2010	8	WALL/MIDDLE	DRYWALL	WHITE	A	D-11	< LOD	0.03
1268	1/25/2010	8	WALL/MIDDLE	DRYWALL	WHITE	B	D-11	< LOD	0.03
1269	1/25/2010	8	WALL/MIDDLE	DRYWALL	WHITE	C	D-11	< LOD	0.03
1270	1/25/2010	9	WALL/MIDDLE	DRYWALL	WHITE	A	D-11	< LOD	0.03
1271	1/25/2010	9	WALL/MIDDLE	DRYWALL	WHITE	B	D-11	< LOD	0.03
1272	1/25/2010	9	WALL/MIDDLE	DRYWALL	WHITE	C	D-11	< LOD	0.03
1273	1/25/2010	9	WALL/MIDDLE	DRYWALL	WHITE	D	D-11	< LOD	0.03
1274	1/25/2010	10	WALL/MIDDLE	DRYWALL	WHITE	A	D-11	< LOD	0.03
1275	1/25/2010	10	WALL/MIDDLE	DRYWALL	WHITE	B	D-11	< LOD	0.03
1276	1/25/2010	10	WALL/MIDDLE	DRYWALL	WHITE	C	D-11	< LOD	0.03

Table 2
XRF Data

Sample #	Sample Date	Sample Location[1]	Component	Substrate	Color	Wall	Unit Number	XRF Reading (mg/cm2)	XRF Error (mg/cm2)
1277	1/25/2010	10	WALL/MIDDLE	DRYWALL	WHITE	D	D-11	< LOD	0.03
1278	1/25/2010	10	CEILING	DRYWALL	WHITE		D-11	< LOD	0.03
1279	1/25/2010	9	CEILING	DRYWALL	WHITE		D-11	< LOD	0.03
1280	1/25/2010	8	CEILING	DRYWALL	WHITE		D-11	< LOD	0.03
1281	1/25/2010	7	CEILING	DRYWALL	WHITE		D-11	< LOD	0.03
1282	1/25/2010	6	CEILING	DRYWALL	WHITE		D-11	< LOD	0.03
1283	1/25/2010	6	CLST SHELF	WOOD	BROWN	D	D-11	< LOD	0.03
1284	1/25/2010	7	CLST SHELF	WOOD	VARNISH	A	D-11	< LOD	0.03
1285	1/25/2010	10	CLST SHELF	WOOD	VARNISH	B	D-11	< LOD	0.03
1286	1/25/2010	10	CLST DOOR	WOOD	VARNISH	B	D-11	< LOD	0.03
1287	1/25/2010	8	CLST DOOR	WOOD	VARNISH	A	D-11	< LOD	0.03
1288	1/25/2010	7	CLST DOOR	WOOD	VARNISH	D	D-11	< LOD	0.03
1289	1/25/2010	7	BASEBOARD	WOOD	VARNISH	D	D-11	< LOD	0.03
1290	1/25/2010	SHUTTER CAL						9.91	0
1291	1/25/2010	7	BASEBOARD	WOOD	VARNISH	B	D-11	< LOD	0.03
1292	1/25/2010	10	BASEBOARD	WOOD	VARNISH	B	D-11	< LOD	0.03

Table 2
XRF Data

Sample #	Sample Date	Sample Location[1]	Component	Substrate	Color	Wall	Unit Number	XRF Reading (mg/cm2)	XRF Error (mg/cm2)
1293	1/25/2010	8	CBNT FRONT	WOOD	VARNISH	C	D-11	< LOD	0.03
1294	1/25/2010	9	DOOR	WOOD	VARNISH	C	D-11	< LOD	0.03
1295	1/25/2010	9	DR. TRIM	WOOD	VARNISH	C	D-11	< LOD	0.03
1296	1/25/2010	6	DR. TRIM	WOOD	VARNISH	A	D-11	< LOD	0.03
1297	1/25/2010	6	DR. CASING LF	WOOD	VARNISH	C	D-11	< LOD	0.03
1298	1/25/2010	6	DOOR	WOOD	VARNISH	D	D-11	< LOD	0.03
1299	1/25/2010	7	WNDW TRIM	WOOD	VARNISH	C	D-11	< LOD	0.03
1300	1/25/2010	10	WNDW TRIM	WOOD	VARNISH	A	D-11	< LOD	0.03
1301	1/25/2010	10	RADIATOR	METAL	GREY	A	D-11	< LOD	0.03
1302	1/25/2010	7	RADIATOR	METAL	GREY	C	D-11	< LOD	0.03
1303	1/25/2010	PORCH REAR	DOOR	METAL	BLUE	A	D-11	< LOD	0.25
1304	1/25/2010	PORCH REAR	DR. TRIM	WOOD	WHITE	A	D-11	< LOD	0.03
1305	1/25/2010	PORCH REAR	WNDW TRIM	WOOD	WHITE	A	D-11	< LOD	0.03
1306	1/25/2010	PORCH REAR	DOOR	WOOD	GREY	C	D-11	< LOD	0.03
1307	1/25/2010	PORCH REAR	PORCH SIDING	WOOD	GREY	C	D-11	< LOD	0.03
1308	1/25/2010	PORCH REAR	PORCH SIDING	WOOD	GREY	A	D-11	< LOD	0.03

Table 2
XRF Data

Sample #	Sample Date	Sample Location[1]	Component	Substrate	Color	Wall	Unit Number	XRF Reading (mg/cm2)	XRF Error (mg/cm2)
1309	1/25/2010	PORCH REAR	PORCH CEILING	WOOD	GREY		D-11	< LOD	0.07
1310	1/25/2010	SRM2572	CALIBRATE - FRONT					1.5	0.1
1311	1/25/2010	1	WALL/MIDDLE	DRYWALL	WHITE	A	G-19	< LOD	0.03
1312	1/25/2010	1	WALL/MIDDLE	DRYWALL	WHITE	B	G-19	< LOD	0.03
1313	1/25/2010	1	WALL/MIDDLE	DRYWALL	WHITE	D	G-19	< LOD	0.03
1314	1/25/2010	1	WALL/MIDDLE	DRYWALL	WHITE	E	G-19	< LOD	0.03
1315	1/25/2010	2	WALL/MIDDLE	DRYWALL	WHITE	A	G-19	< LOD	0.03
1316	1/25/2010	2	WALL/MIDDLE	DRYWALL	WHITE	B	G-19	< LOD	0.03
1317	1/25/2010	2	WALL/MIDDLE	DRYWALL	WHITE	C	G-19	< LOD	0.03
1318	1/25/2010	2	WALL/MIDDLE	DRYWALL	WHITE	D	G-19	< LOD	0.03
1319	1/25/2010	3	WALL/MIDDLE	DRYWALL	WHITE	A	G-19	< LOD	0.03
1320	1/25/2010	3	WALL/MIDDLE	DRYWALL	WHITE	B	G-19	< LOD	0.03
1321	1/25/2010	3	WALL/MIDDLE	DRYWALL	WHITE	C	G-19	< LOD	0.03
1322	1/25/2010	3	WALL/MIDDLE	DRYWALL	WHITE	D	G-19	< LOD	0.03
1323	1/25/2010	4	WALL/MIDDLE	DRYWALL	WHITE	D	G-19	< LOD	0.03
1324	1/25/2010	4	WALL/MIDDLE	DRYWALL	WHITE	B	G-19	< LOD	0.03

Table 2
XRF Data

Sample #	Sample Date	Sample Location[1]	Component	Substrate	Color	Wall	Unit Number	XRF Reading (mg/cm2)	XRF Error (mg/cm2)
1325	1/25/2010	4	WALL/MIDDLE	DRYWALL	WHITE	A	G-19	< LOD	0.03
1326	1/25/2010	5	WALL/MIDDLE	DRYWALL	WHITE	A	G-19	< LOD	0.03
1327	1/25/2010	5	WALL/MIDDLE	DRYWALL	WHITE	B	G-19	< LOD	0.03
1328	1/25/2010	5	WALL/MIDDLE	DRYWALL	WHITE	C	G-19	< LOD	0.03
1329	1/25/2010	5	WALL/MIDDLE	DRYWALL	WHITE	D	G-19	< LOD	0.03
1330	1/25/2010	6	WALL/MIDDLE	DRYWALL	WHITE	D	G-19	< LOD	0.03
1331	1/25/2010	6	WALL/MIDDLE	DRYWALL	WHITE	C	G-19	< LOD	0.03
1332	1/25/2010	6	WALL/MIDDLE	DRYWALL	WHITE	B	G-19	< LOD	0.03
1333	1/25/2010	6	WALL/MIDDLE	DRYWALL	WHITE	A	G-19	< LOD	0.03
1334	1/25/2010	7	WALL/MIDDLE	WOOD	VARNISH	A	G-19	< LOD	0.06
1335	1/25/2010	7	WALL/MIDDLE	DRYWALL	WHITE	B	G-19	< LOD	0.03
1336	1/25/2010	7	WALL/MIDDLE	DRYWALL	WHITE	C	G-19	< LOD	0.03
1337	1/25/2010	7	WALL/MIDDLE	DRYWALL	WHITE	D	G-19	< LOD	0.03
1338	1/25/2010	7	CEILING	DRYWALL	WHITE		G-19	< LOD	0.03
1339	1/25/2010	6	CEILING	DRYWALL	WHITE		G-19	< LOD	0.03
1340	1/25/2010	5	CEILING	DRYWALL	WHITE		G-19	< LOD	0.03

Table 2
XRF Data

Sample #	Sample Date	Sample Location[1]	Component	Substrate	Color	Wall	Unit Number	XRF Reading (mg/cm2)	XRF Error (mg/cm2)
1341	1/25/2010	4	CEILING	DRYWALL	WHITE		G-19	< LOD	0.03
1342	1/25/2010	3	CEILING	DRYWALL	WHITE		G-19	< LOD	0.03
1343	1/25/2010	2	CEILING	DRYWALL	WHITE		G-19	< LOD	0.03
1344	1/25/2010	1	CEILING	DRYWALL	WHITE		G-19	< LOD	0.03
1345	1/25/2010	1	CLST SHELF	WOOD	VARNISH	B	G-19	< LOD	0.03
1346	1/25/2010	SHUTTER CAL						9.8	0
1347	1/25/2010	2	CLST SHELF	WOOD	VARNISH	D	G-19	< LOD	0.03
1348		3	CLST SHELF	WOOD	VARNISH	D	G-19	< LOD	0.03
1349	1/25/2010	5	CLST SHELF	WOOD	VARNISH	B	G-19	< LOD	0.03
1350	1/25/2010	5	CLST DOOR	WOOD	VARNISH	B	G-19	< LOD	0.07
1351	1/25/2010	3	CLST DOOR	WOOD	VARNISH	D	G-19	< LOD	0.03
1352	1/25/2010	2	CLST DOOR	WOOD	VARNISH	D	G-19	< LOD	0.03
1353	1/25/2010	1	CLST DOOR	WOOD	VARNISH	B	G-19	< LOD	0.03
1354	1/25/2010	1	BASEBOARD	WOOD	VARNISH	B	G-19	< LOD	0.03
1355	1/25/2010	2	BASEBOARD	WOOD	VARNISH	A	G-19	< LOD	0.03
1356	1/25/2010	3	BASEBOARD	WOOD	VARNISH	A	G-19	< LOD	0.03

Table 2
XRF Data

Sample #	Sample Date	Sample Location[1]	Component	Substrate	Color	Wall	Unit Number	XRF Reading (mg/cm2)	XRF Error (mg/cm2)
1357	1/25/2010	6	BASEBOARD	WOOD	VARNISH	C	G-19	< LOD	0.03
1358	1/25/2010	6	DR. TRIM	WOOD	VARNISH	D	G-19	< LOD	0.03
1359	1/25/2010	6	DOOR	METAL	WHITE	D	G-19	< LOD	0.12
1360	1/25/2010	1	DOOR	METAL	WHITE	A	G-19	< LOD	0.03
1361	1/25/2010	1	DR. TRIM	WOOD	VARNISH	A	G-19	< LOD	0.07
1362	1/25/2010	1	DOOR	WOOD	VARNISH	C	G-19	< LOD	0.03
1363	1/25/2010	1	DR. TRIM	WOOD	VARNISH	C	G-19	< LOD	0.03
1364	1/25/2010	1	DR. CASING LF	WOOD	VARNISH	E	G-19	< LOD	0.03
1365	1/25/2010	3	DOOR	WOOD	VARNISH	A	G-19	< LOD	0.03
1366	1/25/2010	3	DR. TRIM	WOOD	VARNISH	A	G-19	< LOD	0.03
1367	1/25/2010	4	CBNT FRONT	WOOD	VARNISH	D	G-19	< LOD	0.03
1368	1/25/2010	5	CBNT FRONT	WOOD	VARNISH	D	G-19	< LOD	0.04
1369	1/25/2010	5	WNDW TRIM	WOOD	VARNISH	D	G-19	< LOD	0.03
1370	1/25/2010	6	WNDW TRIM	WOOD	VARNISH	D	G-19	< LOD	0.03
1371	1/25/2010	2	WNDW TRIM	WOOD	VARNISH	B	G-19	< LOD	0.03
1372	1/25/2010	3	WNDW TRIM	WOOD	VARNISH	B	G-19	< LOD	0.03

Table 2
XRF Data

Sample #	Sample Date	Sample Location[1]	Component	Substrate	Color	Wall	Unit Number	XRF Reading (mg/cm2)	XRF Error (mg/cm2)
1373	1/25/2010	3	RADIATOR	METAL	GREY	B	G-19	< LOD	0.03
1374	1/25/2010	2	RADIATOR	METAL	GREY	B	G-19	< LOD	0.03
1375	1/25/2010	1	RADIATOR	METAL	GREY	B	G-19	< LOD	0.03
1376	1/25/2010	6	RADIATOR	METAL	GREY	D	G-19	< LOD	0.03
1377	1/25/2010	PORCH REAR	DOOR	METAL	PURPLE	B	G-19	< LOD	0.07
1378	1/25/2010	PORCH REAR	DR. TRIM	WOOD	WHITE	B	G-19	< LOD	0.05
1379	1/25/2010	PORCH REAR	WNDW TRIM	WOOD	WHITE	B	G-19	< LOD	0.03
1380	1/25/2010	PORCH REAR	DOOR	METAL	GREY	C	G-19	< LOD	0.03
1381	1/25/2010	PORCH REAR	PORCH SIDING	WOOD	GREY	C	G-19	< LOD	0.03
1382	1/25/2010	PORCH REAR	PORCH SIDING	WOOD	GREY	B	G-19	< LOD	0.03
1383	1/25/2010	PORCH REAR	PORCH SIDING	WOOD	GREY	A	G-19	< LOD	0.03
1384	1/25/2010	PORCH REAR	PORCH CEILING	WOOD	GREY		G-19	< LOD	0.03
1385	1/25/2010	PORCH REAR	PORCH SUP COLUMN	WOOD	WHITE	A	G-19	< LOD	0.03
1386	1/25/2010	SRM2573	CALIBRATE - FRONT					1.1	0.1
1387	1/25/2010	5	WALL/MIDDLE	DRYWALL	WHITE	A	H-24	0	0.02
1388	1/25/2010	5	WALL/MIDDLE	DRYWALL	WHITE	B	H-24	0	0.02

Table 2
XRF Data

Sample #	Sample Date	Sample Location[1]	Component	Substrate	Color	Wall	Unit Number	XRF Reading (mg/cm2)	XRF Error (mg/cm2)
1389	1/25/2010	5	WALL/MIDDLE	DRYWALL	WHITE	C	H-24	0.01	0.05
1390	1/25/2010	5	WALL/MIDDLE	DRYWALL	WHITE	D	H-24	0	0.02
1391	1/25/2010	4	WALL/MIDDLE	DRYWALL	WHITE	D	H-24	0.01	0.04
1392	1/25/2010	4	WALL/MIDDLE	DRYWALL	WHITE	C	H-24	0	0.02
1393	1/25/2010	4	WALL/MIDDLE	BURLAP	WHITE	D	H-24	0.01	0.04
1394	1/25/2010	4	WALL/MIDDLE	DRYWALL	WHITE	E	H-24	0	0.02
1395	1/25/2010	2	WALL/MIDDLE	DRYWALL	WHITE	A	H-24	0	0.02
1396	1/25/2010	2	WALL/MIDDLE	DRYWALL	WHITE	B	H-24	0	0.02
1397	1/25/2010	2	WALL/MIDDLE	DRYWALL	WHITE	C	H-24	0	0.02
1398	1/25/2010	3	WALL/MIDDLE	DRYWALL	WHITE	A	H-24	0	0.02
1399	1/25/2010	3	WALL/MIDDLE	DRYWALL	WHITE	B	H-24	0	0.02
1400	1/25/2010	3	WALL/MIDDLE	DRYWALL	WHITE	C	H-24	0	0.02
1401	1/25/2010	3	WALL/MIDDLE	DRYWALL	WHITE	D	H-24	0	0.02
1402	1/25/2010	SHUTTER CAL						9.13	0
1403	1/25/2010	2	CEILING	DRYWALL	WHITE		H-24	< LOD	0.03
1404	1/25/2010	4	CEILING	DRYWALL	WHITE		H-24	< LOD	0.03

Table 2
XRF Data

Sample #	Sample Date	Sample Location[1]	Component	Substrate	Color	Wall	Unit Number	XRF Reading (mg/cm2)	XRF Error (mg/cm2)
1405	1/25/2010	3	CEILING	DRYWALL	WHITE		H-24	< LOD	0.03
1406	1/25/2010	5	CLST SHELF	WOOD	BROWN	A	H-24	< LOD	0.03
1407	1/25/2010	2	CLST SHELF	WOOD	BROWN	D	H-24	< LOD	0.03
1408	1/25/2010	2	CLST DOOR	WOOD	VARNISH	A	H-24	< LOD	0.03
1409	1/25/2010	5	CLST DOOR	WOOD	VARNISH	B	H-24	< LOD	0.05
1410	1/25/2010	4	BASEBOARD	WOOD	VARNISH	B	H-24	< LOD	0.03
1411	1/25/2010	2	BASEBOARD	WOOD	VARNISH	B	H-24	< LOD	0.03
1412	1/25/2010	5	BASEBOARD	WOOD	VARNISH	B	H-24	< LOD	0.06
1413	1/25/2010	5	CLST DR TRIM	WOOD	VARNISH	A	H-24	< LOD	0.03
1414	1/25/2010	4	CLST DR TRIM	WOOD	VARNISH	C	H-24	< LOD	0.03
1415	1/25/2010	4	DOOR	METAL	WHITE	C	H-24	< LOD	0.03
1416	1/25/2010	4	WNDW TRIM	WOOD	VARNISH	C	H-24	< LOD	0.03
1417	1/25/2010	3	WNDW TRIM	WOOD	VARNISH	A	H-24	< LOD	0.03
1418	1/25/2010	3	CBNT FRONT	WOOD	VARNISH	A	H-24	< LOD	0.03
1419	1/25/2010	3	TRIM	WOOD	VARNISH	C	H-24	< LOD	0.03
1420	1/25/2010	2	RADIATOR	METAL	GREY	C	H-24	< LOD	0.03

Table 2
XRF Data

Sample #	Sample Date	Sample Location[1]	Component	Substrate	Color	Wall	Unit Number	XRF Reading (mg/cm2)	XRF Error (mg/cm2)
1421	1/25/2010	4	RADIATOR	METAL	GREY	C	H-24	< LOD	0.03
1422	1/25/2010	1	DOOR	METAL	WHITE	A	H-24	< LOD	0.08
1423	1/25/2010	1	DR. TRIM	WOOD	VARNISH	A	H-24	< LOD	0.04
1424	1/25/2010	1	STR HAND RAIL	WOOD	VARNISH	C	H-24	< LOD	0.03
1425	1/25/2010	1	STR BASEBOARD	WOOD	WHITE	C	H-24	< LOD	0.03
1426	1/25/2010	1	STR RAIL CAP	WOOD	VARNISH	B	H-24	< LOD	0.03
1427	1/25/2010	6	DOOR	WOOD	VARNISH	A	H-24	< LOD	0.03
1428	1/25/2010	6	DR. CASING LF	WOOD	VARNISH	B	H-24	< LOD	0.03
1429	1/25/2010	6	DR. TRIM	WOOD	VARNISH	C	H-24	< LOD	0.03
1430	1/25/2010	8	DR. TRIM	WOOD	VARNISH	C	H-24	< LOD	0.03
1431	1/25/2010	8	DOOR	WOOD	VARNISH	C	H-24	< LOD	0.03
1432	1/25/2010	7	BASEBOARD	WOOD	VARNISH	C	H-24	< LOD	0.03
1433	1/25/2010	6	BASEBOARD	WOOD	VARNISH	D	H-24	< LOD	0.03
1434	1/25/2010	6	CLST DOOR	WOOD	VARNISH	B	H-24	< LOD	0.03
1435	1/25/2010	6	CLST DOOR	WOOD	VARNISH	D	H-24	< LOD	0.03
1436	1/25/2010	7	CLST DOOR	WOOD	VARNISH	D	H-24	< LOD	0.03

Table 2
XRF Data

Sample #	Sample Date	Sample Location[1]	Component	Substrate	Color	Wall	Unit Number	XRF Reading (mg/cm2)	XRF Error (mg/cm2)
1437	1/25/2010	7	CLST SHELF	WOOD	BROWN	D	H-24	< LOD	0.03
1438	1/25/2010	10	CLST DOOR	WOOD	VARNISH	A	H-24	< LOD	0.03
1439	1/25/2010	10	CLST SHELF	WOOD	BROWN	A	H-24	< LOD	0.03
1440	1/25/2010	6	CLST SHELF	WOOD	BROWN	B	H-24	< LOD	0.03
1441	1/25/2010	7	WNDW TRIM	WOOD	BROWN	A	H-24	< LOD	0.03
1442	1/25/2010	10	WNDW TRIM	WOOD	BROWN	C	H-24	< LOD	0.03
1443	1/25/2010	7	RADIATOR	METAL	GREY	A	H-24	< LOD	0.03
1444	1/25/2010	10	RADIATOR	METAL	GREY	C	H-24	< LOD	0.03
1445	1/25/2010	7	CEILING	DRYWALL	WHITE		H-24	< LOD	0.07
1446	1/25/2010	6	CEILING	DRYWALL	WHITE		H-24	< LOD	0.03
1447	1/25/2010	9	CEILING	DRYWALL	WHITE		H-24	< LOD	0.03
1448	1/25/2010	8	CEILING	DRYWALL	WHITE		H-24	< LOD	0.03
1449	1/25/2010	10	CEILING	DRYWALL	WHITE		H-24	< LOD	0.03
1450	1/25/2010	10	WALL/MIDDLE	DRYWALL	WHITE	A	H-24	< LOD	0.03
1451	1/25/2010	10	WALL/MIDDLE	DRYWALL	WHITE	B	H-24	< LOD	0.03
1452	1/25/2010	10	WALL/MIDDLE	DRYWALL	WHITE	C	H-24	< LOD	0.03

Table 2
XRF Data

Sample #	Sample Date	Sample Location[1]	Component	Substrate	Color	Wall	Unit Number	XRF Reading (mg/cm2)	XRF Error (mg/cm2)
1453	1/25/2010	10	WALL/MIDDLE	DRYWALL	WHITE	D	H-24	< LOD	0.03
1454	1/25/2010	9	WALL/MIDDLE	DRYWALL	WHITE	A	H-24	< LOD	0.03
1455	1/25/2010	9	WALL/MIDDLE	DRYWALL	WHITE	C	H-24	< LOD	0.03
1456	1/25/2010	9	WALL/MIDDLE	DRYWALL	WHITE	D	H-24	< LOD	0.11
1457	1/25/2010	8	WALL/MIDDLE	DRYWALL	WHITE	D	H-24	< LOD	0.03
1458	1/25/2010	8	WALL/MIDDLE	DRYWALL	WHITE	C	H-24	< LOD	0.03
1459	1/25/2010	8	WALL/MIDDLE	DRYWALL	WHITE	B	H-24	< LOD	0.19
1460	1/25/2010	8	WALL/MIDDLE	DRYWALL	WHITE	A	H-24	< LOD	0.03
1461	1/25/2010	7	WALL/MIDDLE	DRYWALL	WHITE	A	H-24	< LOD	0.03
1462	1/25/2010	7	WALL/MIDDLE	DRYWALL	WHITE	B	H-24	< LOD	0.03
1463	1/25/2010	7	WALL/MIDDLE	DRYWALL	WHITE	C	H-24	< LOD	0.03
1464	1/25/2010	7	WALL/MIDDLE	DRYWALL	WHITE	D	H-24	< LOD	0.03
1465	1/25/2010	SHUTTER CAL						10.06	0
1466	1/25/2010	6	WALL/MIDDLE	DRYWALL	WHITE	A	H-24	< LOD	0.03
1467	1/25/2010	6	WALL/MIDDLE	DRYWALL	WHITE	B	H-24	< LOD	0.03
1468	1/25/2010	6	WALL/MIDDLE	DRYWALL	WHITE	C	H-24	< LOD	0.03

Table 2
XRF Data

Sample #	Sample Date	Sample Location[1]	Component	Substrate	Color	Wall	Unit Number	XRF Reading (mg/cm2)	XRF Error (mg/cm2)
1469	1/25/2010	6	WALL/MIDDLE	DRYWALL	WHITE	D	H-24	< LOD	0.03
1470	1/25/2010	1	WALL/MIDDLE	DRYWALL	WHITE	C	H-24	< LOD	0.11
1471	1/25/2010	1	WALL/MIDDLE	DRYWALL	WHITE	B	H-24	< LOD	0.03
1472	1/25/2010	1	WALL/MIDDLE	DRYWALL	WHITE	A	H-24	< LOD	0.03
1473	1/25/2010	1	CEILING	DRYWALL	WHITE	A	H-24	< LOD	0.06
1474	1/25/2010	PORCH REAR	DOOR	METAL	BLUE	A	H-24	< LOD	0.08
1475	1/25/2010	PORCH REAR	DR. TRIM	WOOD	WHITE	A	H-24	< LOD	0.03
1476	1/25/2010	PORCH REAR	WNDW TRIM	WOOD	WHITE	A	H-24	< LOD	0.03
1477	1/25/2010	PORCH REAR	DOOR	WOOD	GREY	B	H-24	< LOD	0.8
1478	1/25/2010	PORCH REAR	PORCH SIDING	WOOD	GREY	B	H-24	< LOD	0.03
1479	1/25/2010	PORCH REAR	PORCH SIDING	WOOD	GREY	C	H-24	< LOD	0.03
1480	1/25/2010	PORCH REAR	PORCH SIDING	WOOD	GREY	A	H-24	< LOD	0.03
1481	1/25/2010	PORCH REAR	PORCH CEILING	WOOD	GREY		H-24	< LOD	0.03
1482	1/25/2010	SRM2574	CALIBRATE - FRONT					0.7	0.1
1483	1/25/2010	2	WALL/MIDDLE	DRYWALL	WHITE	A	K-34	< LOD	0.03
1484	1/25/2010	2	WALL/MIDDLE	DRYWALL	WHITE	B	K-34	< LOD	0.03

Table 2
XRF Data

Sample #	Sample Date	Sample Location[1]	Component	Substrate	Color	Wall	Unit Number	XRF Reading (mg/cm2)	XRF Error (mg/cm2)
1485	1/25/2010	2	WALL/MIDDLE	DRYWALL	WHITE	C	K-34	< LOD	0.03
1486	1/25/2010	3	WALL/MIDDLE	DRYWALL	WHITE	A	K-34	< LOD	0.05
1487	1/25/2010	3	WALL/MIDDLE	DRYWALL	WHITE	B	K-34	< LOD	0.03
1488	1/25/2010	3	WALL/MIDDLE	DRYWALL	WHITE	C	K-34	< LOD	0.03
1489	1/25/2010	3	WALL/MIDDLE	DRYWALL	WHITE	D	K-34	< LOD	0.03
1490	1/25/2010	4	WALL/MIDDLE	DRYWALL	WHITE	A	K-34	< LOD	0.08
1491	1/25/2010	4	WALL/MIDDLE	DRYWALL	WHITE	B	K-34	< LOD	0.03
1492	1/25/2010	4	WALL/MIDDLE	DRYWALL	WHITE	C	K-34	< LOD	0.03
1493	1/25/2010	4	WALL/MIDDLE	BURLAP	TAN	D	K-34	< LOD	0.05
1494	1/25/2010	4	WALL/MIDDLE	DRYWALL	WHITE	E	K-34	< LOD	0.03
1495	1/25/2010	5	WALL/MIDDLE	DRYWALL	WHITE	A	K-34	< LOD	0.03
1496	1/25/2010	5	WALL/MIDDLE	DRYWALL	WHITE	B	K-34	< LOD	0.03
1497	1/25/2010	5	WALL/MIDDLE	DRYWALL	WHITE	C	K-34	< LOD	0.03
1498	1/25/2010	5	WALL/MIDDLE	DRYWALL	WHITE	D	K-34	< LOD	0.03
1499	1/25/2010	4	CEILING	DRYWALL	WHITE		K-34	< LOD	0.03
1500	1/25/2010	3	CEILING	DRYWALL	WHITE		K-34	< LOD	0.03

Table 2
XRF Data

Sample #	Sample Date	Sample Location[1]	Component	Substrate	Color	Wall	Unit Number	XRF Reading (mg/cm2)	XRF Error (mg/cm2)
1501	1/25/2010	2	CEILING	DRYWALL	WHITE		K-34	< LOD	0.03
1502	1/25/2010	5	CLST SHELF	WOOD	VARNISH	D	K-34	< LOD	0.03
1503	1/25/2010	2	CLST SHELF	WOOD	VARNISH	A	K-34	< LOD	0.03
1504	1/25/2010	2	CLST DOOR	WOOD	VARNISH	A	K-34	< LOD	0.03
1505	1/25/2010	5	CLST DOOR	WOOD	VARNISH	B	K-34	< LOD	0.03
1506	1/25/2010	4	DR. TRIM	WOOD	VARNISH	C	K-34	< LOD	0.03
1507	1/25/2010	4	DOOR	METAL	WHITE	C	K-34	< LOD	0.06
1508	1/25/2010	4	DR. TRIM	WOOD	BROWN	C	K-34	< LOD	0.03
1509	1/25/2010	4	BASEBOARD	WOOD	VARNISH	B	K-34	< LOD	0.03
1510	1/25/2010	5	BASEBOARD	WOOD	VARNISH	B	K-34	< LOD	0.03
1511	1/25/2010	2	BASEBOARD	WOOD	VARNISH	B	K-34	< LOD	0.04
1512	1/25/2010	3	CBNT FRONT	WOOD	VARNISH	A	K-34	< LOD	0.03
1513	1/25/2010	3	TRIM	WOOD	VARNISH	C	K-34	< LOD	0.03
1514	1/25/2010	3	WNDW TRIM	WOOD	VARNISH	A	K-34	< LOD	0.04
1515	1/25/2010	4	WNDW TRIM	WOOD	VARNISH	C	K-34	< LOD	0.03
1516	1/25/2010	4	RADIATOR	METAL	GREY	C	K-34	< LOD	0.03

Table 2
XRF Data

Sample #	Sample Date	Sample Location[1]	Component	Substrate	Color	Wall	Unit Number	XRF Reading (mg/cm2)	XRF Error (mg/cm2)
1517	1/25/2010	2	RADIATOR	METAL	WHITE	C	K-34	< LOD	0.03
1518	1/25/2010	1	DOOR	METAL	WHITE	A	K-34	< LOD	0.04
1519	1/25/2010	1	DR. TRIM	WOOD	VARNISH	A	K-34	< LOD	0.03
1520	1/25/2010	1	STR RAIL CAP	WOOD	VARNISH	B	K-34	< LOD	0.03
1521	1/25/2010	1	STR HAND RAIL	WOOD	VARNISH	C	K-34	< LOD	0.03
1522	1/25/2010	1	STR BASEBOARD	WOOD	WHITE	C	K-34	< LOD	0.03
1523	1/25/2010	1	WALL/MIDDLE	DRYWALL	WHITE	A	K-34	< LOD	0.03
1524	1/25/2010	1	WALL/MIDDLE	DRYWALL	WHITE	A	K-34	< LOD	0.03
1525	1/25/2010	1	WALL/MIDDLE	DRYWALL	WHITE	B	K-34	< LOD	0.03
1526	1/25/2010	1	WALL/MIDDLE	CEILING	WHITE		K-34	< LOD	0.03
1527	1/25/2010	SHUTTER CAL						10.1	0
1528	1/25/2010	6	WALL/MIDDLE	DRYWALL	WHITE	A	K-34	< LOD	0.05
1529	1/25/2010	6	WALL/MIDDLE	DRYWALL	WHITE	B	K-34	< LOD	0.03
1530	1/25/2010	6	WALL/MIDDLE	DRYWALL	WHITE	C	K-34	< LOD	0.03
1531	1/25/2010	6	WALL/MIDDLE	DRYWALL	WHITE	D	K-34	< LOD	0.03
1532	1/25/2010	7	WALL/MIDDLE	DRYWALL	WHITE	D	K-34	< LOD	0.03

Table 2
XRF Data

Sample #	Sample Date	Sample Location[1]	Component	Substrate	Color	Wall	Unit Number	XRF Reading (mg/cm2)	XRF Error (mg/cm2)
1533	1/25/2010	7	WALL/MIDDLE	DRYWALL	WHITE	C	K-34	< LOD	0.03
1534	1/25/2010	7	WALL/MIDDLE	DRYWALL	WHITE	B	K-34	< LOD	0.03
1535	1/25/2010	7	WALL/MIDDLE	DRYWALL	WHITE	A	K-34	< LOD	0.03
1536	1/25/2010	8	WALL/MIDDLE	DRYWALL	WHITE	A	K-34	< LOD	0.03
1537	1/25/2010	8	WALL/MIDDLE	DRYWALL	WHITE	B	K-34	< LOD	0.03
1538	1/25/2010	8	WALL/MIDDLE	DRYWALL	WHITE	C	K-34	< LOD	0.03
1539	1/25/2010	8	WALL/MIDDLE	DRYWALL	WHITE	D	K-34	< LOD	0.03
1540	1/25/2010	9	WALL/MIDDLE	DRYWALL	WHITE	D	K-34	< LOD	0.03
1541	1/25/2010	9	WALL/MIDDLE	DRYWALL	WHITE	C	K-34	< LOD	0.03
1542	1/25/2010	9	WALL/MIDDLE	DRYWALL	WHITE	A	K-34	< LOD	0.03
1543	1/25/2010	10	WALL/MIDDLE	DRYWALL	WHITE	A	K-34	< LOD	0.03
1544	1/25/2010	10	WALL/MIDDLE	DRYWALL	WHITE	B	K-34	< LOD	0.03
1545	1/25/2010	10	WALL/MIDDLE	DRYWALL	WHITE	C	K-34	< LOD	0.03
1546	1/25/2010	10	WALL/MIDDLE	DRYWALL	WHITE	D	K-34	< LOD	0.03
1547	1/25/2010	10	CEILING	DRYWALL	WHITE		K-34	< LOD	0.08
1548	1/25/2010	9	CEILING	DRYWALL	WHITE		K-34	< LOD	0.03

Table 2
XRF Data

Sample #	Sample Date	Sample Location[1]	Component	Substrate	Color	Wall	Unit Number	XRF Reading (mg/cm2)	XRF Error (mg/cm2)
1549	1/25/2010	8	CEILING	DRYWALL	WHITE		K-34	< LOD	0.03
1550	1/25/2010	7	CEILING	DRYWALL	WHITE		K-34	< LOD	0.04
1551	1/25/2010	6	CEILING	DRYWALL	WHITE		K-34	< LOD	0.03
1552	1/25/2010	6	CLST SHELF	WOOD	BROWN	B	K-34	< LOD	0.03
1553	1/25/2010	7	CLST SHELF	WOOD	BROWN	D	K-34	< LOD	0.03
1554	1/25/2010	10	CLST SHELF	WOOD	BROWN	A	K-34	< LOD	0.03
1555	1/25/2010	10	CLST DOOR	WOOD	VARNISH	A	K-34	< LOD	0.03
1556	1/25/2010	7	CLST DOOR	WOOD	VARNISH	D	K-34	< LOD	0.03
1557	1/25/2010	6	CLST DOOR	WOOD	VARNISH	B	K-34	< LOD	0.03
1558	1/25/2010	6	BASEBOARD	WOOD	VARNISH	B	K-34	< LOD	0.03
1559	1/25/2010	7	BASEBOARD	WOOD	VARNISH	B	K-34	< LOD	0.03
1560	1/25/2010	10	BASEBOARD	WOOD	VARNISH	B	K-34	< LOD	0.03
1561	1/25/2010	9	CBNT FRONT	WOOD	VARNISH	C	K-34	< LOD	0.03
1562	1/25/2010	8	DOOR	WOOD	VARNISH	C	K-34	< LOD	1.2
2306	4/26/2010	8	DOOR	WOOD	VARNISH	C	K-34	< LOD	0.03
1563	1/25/2010	8	DR. TRIM	WOOD	VARNISH	C	K-34	< LOD	0.04

Table 2
XRF Data

Sample #	Sample Date	Sample Location[1]	Component	Substrate	Color	Wall	Unit Number	XRF Reading (mg/cm2)	XRF Error (mg/cm2)
1564	1/25/2010	6	DR. TRIM	WOOD	VARNISH	C	K-34	< LOD	0.03
1565	1/25/2010	6	DR. CASING LF	WOOD	VARNISH	B	K-34	< LOD	0.03
1566	1/25/2010	6	DOOR	WOOD	VARNISH	A	K-34	< LOD	0.03
1567	1/25/2010	7	WNDW TRIM	WOOD	VARNISH	A	K-34	< LOD	0.04
1568	1/25/2010	10	WNDW TRIM	WOOD	VARNISH	C	K-34	< LOD	0.03
1569	1/25/2010	10	RADIATOR	METAL	GREY	C	K-34	< LOD	0.03
1570	1/25/2010	7	RADIATOR	METAL	GREY	A	K-34	< LOD	0.03
1571	1/25/2010	PORCH REAR	DOOR	METAL	BLUE	A	K-34	< LOD	0.08
1572	1/25/2010	PORCH REAR	DR. TRIM	WOOD	WHITE	A	K-34	< LOD	0.03
1573	1/25/2010	PORCH REAR	WNDW TRIM	WOOD	WHITE	A	K-34	< LOD	0.05
1574	1/25/2010	PORCH REAR	DOOR	WOOD	GREY	B	K-34	< LOD	1.4
2307	4/26/2010	PORCH REAR	DOOR	WOOD	GREY	B	K-34	0.3	0.15
1575	1/25/2010	PORCH REAR	PORCH SIDING	WOOD	GREY	B	K-34	< LOD	0.03
1576	1/25/2010	PORCH REAR	PORCH SIDING	WOOD	GREY	C	K-34	< LOD	0.03
1577	1/25/2010	PORCH REAR	PORCH SIDING	WOOD	GREY	A	K-34	< LOD	0.03
1578	1/25/2010	PORCH REAR	PORCH CEILING	WOOD	GREY		K-34	< LOD	0.03

Table 2
XRF Data

Sample #	Sample Date	Sample Location[1]	Component	Substrate	Color	Wall	Unit Number	XRF Reading (mg/cm2)	XRF Error (mg/cm2)
1579	1/25/2010	SHUTTER CAL						10.13	0
1580	1/25/2010	SRM2575	CALIBRATE - FRONT					0.3	0.06
1581	1/26/2010	SHUTTER CAL						10.19	0
1582	1/26/2010	SRM2571	CALIBRATE - FRONT					3.8	0.2
1583	1/26/2010	1	WALL/MIDDLE	DRYWALL	WHITE	B	Q-54	< LOD	0.03
1584	1/26/2010	1	WALL/MIDDLE	DRYWALL	WHITE	C	Q-54	< LOD	0.03
1585	1/26/2010	1	WALL/MIDDLE	DRYWALL	WHITE	D	Q-54	< LOD	0.11
1586	1/26/2010	1	WALL/MIDDLE	DRYWALL	WHITE	E	Q-54	< LOD	0.03
1587	1/26/2010	2	WALL/MIDDLE	WOOD	VARNISH	A	Q-54	< LOD	0.17
1588	1/26/2010	2	WALL/MIDDLE	DRYWALL	WHITE	B	Q-54	< LOD	0.03
1589	1/26/2010	2	WALL/MIDDLE	DRYWALL	WHITE	C	Q-54	< LOD	0.03
1590	1/26/2010	2	WALL/MIDDLE	DRYWALL	WHITE	D	Q-54	< LOD	0.03
1591	1/26/2010	3	WALL/MIDDLE	DRYWALL	WHITE	D	Q-54	< LOD	0.03
1592	1/26/2010	3	WALL/MIDDLE	DRYWALL	WHITE	C	Q-54	< LOD	0.03
1593	1/26/2010	3	WALL/MIDDLE	DRYWALL	WHITE	B	Q-54	< LOD	0.03
1594	1/26/2010	3	WALL/MIDDLE	DRYWALL	WHITE	A	Q-54	< LOD	0.03

Table 2
XRF Data

Sample #	Sample Date	Sample Location[1]	Component	Substrate	Color	Wall	Unit Number	XRF Reading (mg/cm2)	XRF Error (mg/cm2)
1595	1/26/2010	4	WALL/MIDDLE	DRYWALL	WHITE	A	Q-54	< LOD	0.03
1596	1/26/2010	4	WALL/MIDDLE	DRYWALL	WHITE	B	Q-54	< LOD	0.03
1597	1/26/2010	4	WALL/MIDDLE	DRYWALL	WHITE	C	Q-54	< LOD	0.03
1598	1/26/2010	4	WALL/MIDDLE	DRYWALL	WHITE	D	Q-54	< LOD	0.03
1599	1/26/2010	5	WALL/MIDDLE	DRYWALL	WHITE	D	Q-54	< LOD	0.03
1600	1/26/2010	5	WALL/MIDDLE	DRYWALL	WHITE	B	Q-54	< LOD	0.03
1601	1/26/2010	5	WALL/MIDDLE	DRYWALL	WHITE	A	Q-54	< LOD	0.03
1602	1/26/2010	6	WALL/MIDDLE	DRYWALL	WHITE	A	Q-54	< LOD	0.03
1603	1/26/2010	6	WALL/MIDDLE	DRYWALL	WHITE	B	Q-54	< LOD	0.03
1604	1/26/2010	6	WALL/MIDDLE	DRYWALL	WHITE	C	Q-54	< LOD	0.03
1605	1/26/2010	6	WALL/MIDDLE	DRYWALL	WHITE	D	Q-54	< LOD	0.03
1606	1/26/2010	7	WALL/MIDDLE	DRYWALL	WHITE	D	Q-54	< LOD	0.03
1607	1/26/2010	7	WALL/MIDDLE	DRYWALL	WHITE	C	Q-54	< LOD	0.03
1608	1/26/2010	7	WALL/MIDDLE	DRYWALL	WHITE	B	Q-54	< LOD	0.03
1609	1/26/2010	7	WALL/MIDDLE	DRYWALL	WHITE	A	Q-54	< LOD	0.03
1610	1/26/2010	8	WALL/MIDDLE	DRYWALL	WHITE	A	Q-54	< LOD	0.03

Table 2
XRF Data

Sample #	Sample Date	Sample Location[1]	Component	Substrate	Color	Wall	Unit Number	XRF Reading (mg/cm2)	XRF Error (mg/cm2)
1611	1/26/2010	8	WALL/MIDDLE	DRYWALL	WHITE	B	Q-54	< LOD	0.03
1612	1/26/2010	8	WALL/MIDDLE	DRYWALL	WHITE	C	Q-54	< LOD	0.06
1613	1/26/2010	8	WALL/MIDDLE	DRYWALL	WHITE	D	Q-54	< LOD	0.03
1614	1/26/2010	9	WALL/MIDDLE	DRYWALL	WHITE	D	Q-54	< LOD	0.03
1615	1/26/2010	9	WALL/MIDDLE	DRYWALL	WHITE	C	Q-54	< LOD	0.03
1616	1/26/2010	9	WALL/MIDDLE	DRYWALL	WHITE	B	Q-54	< LOD	0.03
1617	1/26/2010	9	WALL/MIDDLE	DRYWALL	WHITE	A	Q-54	< LOD	0.09
1618	1/26/2010	9	CEILING	DRYWALL	WHITE		Q-54	< LOD	0.03
1619	1/26/2010	8	CEILING	DRYWALL	WHITE		Q-54	< LOD	0.03
1620	1/26/2010	7	CEILING	DRYWALL	WHITE		Q-54	< LOD	0.03
1621	1/26/2010	6	CEILING	DRYWALL	WHITE		Q-54	< LOD	0.03
1622	1/26/2010	5	CEILING	DRYWALL	WHITE		Q-54	< LOD	0.03
1623	1/26/2010	4	CEILING	DRYWALL	WHITE		Q-54	< LOD	0.03
1624	1/26/2010	3	CEILING	DRYWALL	WHITE		Q-54	< LOD	0.03
1625	1/26/2010	2	CEILING	DRYWALL	WHITE		Q-54	< LOD	0.03
1626	1/26/2010	1	CEILING	DRYWALL	WHITE		Q-54	< LOD	0.03

Table 2
XRF Data

Sample #	Sample Date	Sample Location[1]	Component	Substrate	Color	Wall	Unit Number	XRF Reading (mg/cm2)	XRF Error (mg/cm2)
1627	1/26/2010	1	CLST SHELF	WOOD	VARNISH	E	Q-54	< LOD	0.05
1628	1/26/2010	3	CLST SHELF	WOOD	VARNISH	D	Q-54	< LOD	0.03
1629	1/26/2010	7	CLST SHELF	WOOD	VARNISH	B	Q-54	< LOD	0.03
1630	1/26/2010	SHUTTER CAL						10.14	0
1631	1/26/2010	8	CLST SHELF	WOOD	VARNISH	B	Q-54	< LOD	0.05
1632	1/26/2010	9	CLST SHELF	WOOD	BROWN	B	Q-54	< LOD	0.03
1633	1/26/2010	9	CLST DOOR	WOOD	VARNISH	B	Q-54	< LOD	0.03
1634	1/26/2010	8	CLST DOOR	WOOD	VARNISH	B	Q-54	< LOD	0.03
1635	1/26/2010	7	CLST DOOR	WOOD	VARNISH	B	Q-54	< LOD	0.03
1636	1/26/2010	3	CLST DOOR	WOOD	VARNISH	D	Q-54	< LOD	0.03
1637	1/26/2010	1	CLST DOOR	WOOD	VARNISH	E	Q-54	< LOD	0.03
1638	1/26/2010	1	BASEBOARD	WOOD	VARNISH	E	Q-54	< LOD	0.03
1639	1/26/2010	2	BASEBOARD	WOOD	VARNISH	C	Q-54	< LOD	0.03
1640	1/26/2010	6	BASEBOARD	WOOD	VARNISH	B	Q-54	< LOD	0.03
1641	1/26/2010	7	BASEBOARD	WOOD	VARNISH	A	Q-54	< LOD	0.03
1642	1/26/2010	8	BASEBOARD	WOOD	VARNISH	A	Q-54	< LOD	0.09

Table 2
XRF Data

Sample #	Sample Date	Sample Location[1]	Component	Substrate	Color	Wall	Unit Number	XRF Reading (mg/cm2)	XRF Error (mg/cm2)
1643	1/26/2010	9	BASEBOARD	WOOD	VARNISH	A	Q-54	< LOD	0.03
1644	1/26/2010	4	CBNT FRONT	WOOD	VARNISH	B	Q-54	< LOD	0.03
1645	1/26/2010	3	CBNT FRONT	WOOD	VARNISH	B	Q-54	< LOD	0.03
1646	1/26/2010	1	DOOR	WOOD	VARNISH	B	Q-54	< LOD	0.03
1647	1/26/2010	1	DR. TRIM	WOOD	VARNISH	C	Q-54	< LOD	0.03
1648	1/26/2010	1	DR. CASING LF	WOOD	VARNISH	D	Q-54	< LOD	0.03
1649	1/26/2010	5	DOOR	WOOD	VARNISH	A	Q-54	< LOD	0.17
1650	1/26/2010	5	DR. TRIM	WOOD	VARNISH	A	Q-54	< LOD	0.03
1651	1/26/2010	7	DR. CASING LF	WOOD	VARNISH	A	Q-54	< LOD	0.03
1652	1/26/2010	7	DR. TRIM	WOOD	VARNISH	B	Q-54	< LOD	0.03
1653	1/26/2010	7	DOOR	WOOD	VARNISH	B	Q-54	< LOD	0.03
1654	1/26/2010	7	WNDW TRIM	WOOD	VARNISH	D	Q-54	< LOD	0.03
1655	1/26/2010	8	WNDW TRIM	WOOD	VARNISH	D	Q-54	< LOD	0.05
1656	1/26/2010	9	WNDW TRIM	WOOD	VARNISH	D	Q-54	< LOD	0.12
1657	1/26/2010	2	WNDW TRIM	WOOD	VARNISH	B	Q-54	< LOD	0.03
1658	1/26/2010	3	WNDW TRIM	WOOD	VARNISH	B	Q-54	< LOD	0.03

Table 2
XRF Data

Sample #	Sample Date	Sample Location[1]	Component	Substrate	Color	Wall	Unit Number	XRF Reading (mg/cm2)	XRF Error (mg/cm2)
1659	1/26/2010	2	RADIATOR	METAL	WHITE	B	Q-54	< LOD	0.03
1660	1/26/2010	1	RADIATOR	METAL	WHITE	E	Q-54	< LOD	0.03
1661	1/26/2010	7	RADIATOR	METAL	GREY	D	Q-54	< LOD	0.03
1662	1/26/2010	8	RADIATOR	METAL	GREY	D	Q-54	< LOD	0.03
1663	1/26/2010	9	RADIATOR	METAL	GREY	D	Q-54	< LOD	0.03
1664	1/26/2010	2	DOOR	METAL	WHITE	B	Q-54	< LOD	0.2
1665	1/26/2010	1	DOOR	METAL	WHITE	A	Q-54	< LOD	0.11
1666	1/26/2010	1	DR. TRIM	WOOD	VARNISH	A	Q-54	< LOD	0.05
1667	1/26/2010	2	DR. TRIM	WOOD	VARNISH	B	Q-54	< LOD	0.03
1668	1/26/2010	PORCH REAR	DR. TRIM	WOOD	WHITE	D	Q-54	< LOD	0.04
1669	1/26/2010	PORCH REAR	WNDW TRIM	WOOD	WHITE	D	Q-54	< LOD	0.03
1670	1/26/2010	PORCH REAR	PORCH RAIL CAP	WOOD	WHITE	A	Q-54	< LOD	0.03
1671	1/26/2010	PORCH REAR	PORCH BALUSTER	WOOD	GREY	B	Q-54	< LOD	0.03
1672	1/26/2010	PORCH REAR	PORCH CEILING	WOOD	GREY		Q-54	< LOD	0.03
1673	1/26/2010	PORCH REAR	DOOR	WOOD	GREY	C	Q-54	< LOD	0.32
1674	1/26/2010	PORCH REAR	PORCH SIDING	WOOD	GREY	C	Q-54	< LOD	0.03

Table 2
XRF Data

Sample #	Sample Date	Sample Location[1]	Component	Substrate	Color	Wall	Unit Number	XRF Reading (mg/cm2)	XRF Error (mg/cm2)
1675	1/26/2010	PORCH REAR	PORCH SIDING	WOOD	GREY	D	Q-54	< LOD	0.03
1676	1/26/2010	PORCH REAR	PORCH SIDING	WOOD	GREY	A	Q-54	< LOD	0.03
1677	1/26/2010	PORCH REAR	DOOR	METAL	GREEN	D	Q-54	0.8	0.1
1678	1/26/2010	SRM2572	CALIBRATE - FRONT					1.6	0.3
1679	1/26/2010	1	WALL/MIDDLE	DRYWALL	WHITE	B	P-50	0	0.02
1680	1/26/2010	1	WALL/MIDDLE	DRYWALL	WHITE	C	P-50	0	0.02
1681	1/26/2010	1	WALL/MIDDLE	DRYWALL	WHITE	D	P-50	0	0.02
1682	1/26/2010	1	WALL/MIDDLE	DRYWALL	WHITE	E	P-50	0.01	0.03
1683	1/26/2010	SHUTTER CAL						10.65	0
1684	1/26/2010	2	WALL/MIDDLE	WOOD	VARNISH	A	P-50	< LOD	0.03
1685	1/26/2010	2	WALL/MIDDLE	DRYWALL	WHITE	B	P-50	< LOD	0.03
1686	1/26/2010	2	WALL/MIDDLE	DRYWALL	WHITE	C	P-50	< LOD	0.03
1687	1/26/2010	2	WALL/MIDDLE	DRYWALL	WHITE	D	P-50	< LOD	0.03
1688	1/26/2010	3	WALL/MIDDLE	DRYWALL	WHITE	D	P-50	< LOD	0.03
1689	1/26/2010	3	WALL/MIDDLE	DRYWALL	WHITE	C	P-50	< LOD	0.03
1690	1/26/2010	3	WALL/MIDDLE	DRYWALL	WHITE	B	P-50	< LOD	0.05

Table 2
XRF Data

Sample #	Sample Date	Sample Location[1]	Component	Substrate	Color	Wall	Unit Number	XRF Reading (mg/cm2)	XRF Error (mg/cm2)
1691	1/26/2010	3	WALL/MIDDLE	DRYWALL	WHITE	A	P-50	< LOD	0.03
1692	1/26/2010	4	WALL/MIDDLE	DRYWALL	WHITE	A	P-50	< LOD	0.06
1693	1/26/2010	4	WALL/MIDDLE	DRYWALL	WHITE	B	P-50	< LOD	0.03
1694	1/26/2010	4	WALL/MIDDLE	DRYWALL	WHITE	C	P-50	< LOD	0.03
1695	1/26/2010	4	WALL/MIDDLE	DRYWALL	WHITE	D	P-50	< LOD	0.03
1696	1/26/2010	5	WALL/MIDDLE	DRYWALL	WHITE	D	P-50	< LOD	0.03
1697	1/26/2010	5	WALL/MIDDLE	DRYWALL	WHITE	B	P-50	< LOD	0.03
1698	1/26/2010	5	WALL/MIDDLE	DRYWALL	WHITE	A	P-50	< LOD	0.03
1699	1/26/2010	6	WALL/MIDDLE	DRYWALL	WHITE	A	P-50	< LOD	0.03
1700	1/26/2010	6	WALL/MIDDLE	DRYWALL	WHITE	B	P-50	< LOD	0.03
1701	1/26/2010	6	WALL/MIDDLE	DRYWALL	WHITE	C	P-50	< LOD	0.06
1702	1/26/2010	6	WALL/MIDDLE	DRYWALL	WHITE	D	P-50	< LOD	0.04
1703	1/26/2010	7	WALL/MIDDLE	DRYWALL	WHITE	D	P-50	< LOD	0.04
1704	1/26/2010	7	WALL/MIDDLE	DRYWALL	WHITE	C	P-50	< LOD	0.03
1705	1/26/2010	7	WALL/MIDDLE	DRYWALL	WHITE	B	P-50	< LOD	0.08
1706	1/26/2010	7	WALL/MIDDLE	DRYWALL	WHITE	A	P-50	< LOD	0.03

Table 2
XRF Data

Sample #	Sample Date	Sample Location[1]	Component	Substrate	Color	Wall	Unit Number	XRF Reading (mg/cm2)	XRF Error (mg/cm2)
1707	1/26/2010	8	WALL/MIDDLE	DRYWALL	WHITE	A	P-50	< LOD	0.03
1708	1/26/2010	8	WALL/MIDDLE	DRYWALL	WHITE	B	P-50	< LOD	0.15
1709	1/26/2010	8	WALL/MIDDLE	DRYWALL	WHITE	C	P-50	< LOD	0.03
1710	1/26/2010	8	WALL/MIDDLE	DRYWALL	WHITE	D	P-50	< LOD	0.03
1711	1/26/2010	9	WALL/MIDDLE	DRYWALL	WHITE	D	P-50	< LOD	0.03
1712	1/26/2010	9	WALL/MIDDLE	DRYWALL	WHITE	C	P-50	< LOD	0.03
1713	1/26/2010	9	WALL/MIDDLE	DRYWALL	WHITE	B	P-50	< LOD	0.03
1714	1/26/2010	9	WALL/MIDDLE	DRYWALL	WHITE	A	P-50	< LOD	0.03
1715	1/26/2010	9	CEILING	DRYWALL	WHITE		P-50	< LOD	0.09
1716	1/26/2010	8	CEILING	DRYWALL	WHITE		P-50	< LOD	0.11
1717	1/26/2010	7	CEILING	DRYWALL	WHITE		P-50	< LOD	0.03
1718	1/26/2010	6	CEILING	DRYWALL	WHITE		P-50	< LOD	0.03
1719	1/26/2010	5	CEILING	DRYWALL	WHITE		P-50	< LOD	0.06
1720	1/26/2010	4	CEILING	DRYWALL	WHITE		P-50	< LOD	0.03
1721	1/26/2010	3	CEILING	DRYWALL	WHITE		P-50	< LOD	0.03
1722	1/26/2010	2	CEILING	DRYWALL	WHITE		P-50	< LOD	0.03

Table 2
XRF Data

Sample #	Sample Date	Sample Location[1]	Component	Substrate	Color	Wall	Unit Number	XRF Reading (mg/cm2)	XRF Error (mg/cm2)
1723	1/26/2010	1	CEILING	DRYWALL	WHITE		P-50	< LOD	0.06
1724	1/26/2010	1	CLST SHELF	WOOD	VARNISH	E	P-50	< LOD	0.03
1725	1/26/2010	3	CLST SHELF	WOOD	VARNISH	D	P-50	< LOD	0.06
1726	1/26/2010	7	CLST SHELF	WOOD	BROWN	B	P-50	< LOD	0.03
1727	1/26/2010	8	CLST SHELF	WOOD	BROWN	B	P-50	< LOD	0.03
1728	1/26/2010	9	CLST SHELF	WOOD	BROWN	B	P-50	< LOD	0.03
1729	1/26/2010	9	CLST DOOR	WOOD	VARNISH	B	P-50	< LOD	0.99
1730	1/26/2010	8	CLST DOOR	WOOD	VARNISH	B	P-50	< LOD	0.03
1731	1/26/2010	7	CLST DOOR	WOOD	VARNISH	B	P-50	< LOD	0.03
1732	1/26/2010	3	CLST DOOR	WOOD	VARNISH	D	P-50	< LOD	0.03
1733	1/26/2010	1	CLST DOOR	WOOD	VARNISH	E	P-50	< LOD	0.03
1734	1/26/2010	1	BASEBOARD	WOOD	VARNISH	E	P-50	< LOD	0.03
1735	1/26/2010	SHUTTER CAL						10.84	0
1736	1/26/2010	2	BASEBOARD	WOOD	VARNISH	C	P-50	< LOD	0.04
1737	1/26/2010	6	BASEBOARD	WOOD	VARNISH	B	P-50	< LOD	0.03
1738	1/26/2010	7	BASEBOARD	WOOD	VARNISH	A	P-50	< LOD	0.03

Table 2
XRF Data

Sample #	Sample Date	Sample Location[1]	Component	Substrate	Color	Wall	Unit Number	XRF Reading (mg/cm2)	XRF Error (mg/cm2)
1739	1/26/2010	8	BASEBOARD	WOOD	VARNISH	A	P-50	< LOD	0.03
1740	1/26/2010	9	BASEBOARD	WOOD	VARNISH	A	P-50	< LOD	0.03
1741	1/26/2010	4	CBNT FRONT	WOOD	VARNISH	B	P-50	< LOD	0.03
1742	1/26/2010	3	CBNT FRONT	WOOD	VARNISH	B	P-50	< LOD	0.03
1743	1/26/2010	1	DOOR	WOOD	VARNISH	B	P-50	< LOD	0.03
1744	1/26/2010	1	DR. CASING LF	WOOD	VARNISH	C	P-50	< LOD	0.03
1745	1/26/2010	1	DR. TRIM	WOOD	VARNISH	D	P-50	< LOD	0.03
1746	1/26/2010	1	DR. TRIM	WOOD	VARNISH	A	P-50	< LOD	0.03
1747	1/26/2010	1	DOOR	METAL	WHITE	A	P-50	< LOD	0.06
1748	1/26/2010	2	DOOR	METAL	WHITE	B	P-50	< LOD	0.07
1749	1/26/2010	2	DR. TRIM	WOOD	VARNISH	B	P-50	< LOD	0.03
1750	1/26/2010	5	DR. TRIM	WOOD	VARNISH	A	P-50	< LOD	0.03
1751	1/26/2010	5	DOOR	WOOD	VARNISH	A	P-50	< LOD	0.03
1752	1/26/2010	7	DOOR	WOOD	VARNISH	B	P-50	< LOD	0.03
1753	1/26/2010	7	DR. TRIM	WOOD	VARNISH	B	P-50	< LOD	0.07
1754	1/26/2010	7	DR. CASING LF	WOOD	VARNISH	A	P-50	< LOD	0.03

Table 2
XRF Data

Sample #	Sample Date	Sample Location[1]	Component	Substrate	Color	Wall	Unit Number	XRF Reading (mg/cm2)	XRF Error (mg/cm2)
1755	1/26/2010	7	WNDW TRIM	WOOD	VARNISH	D	P-50	< LOD	0.04
1756	1/26/2010	8	WNDW TRIM	WOOD	VARNISH	D	P-50	< LOD	0.03
1757	1/26/2010	9	WNDW TRIM	WOOD	VARNISH	D	P-50	< LOD	0.04
1758	1/26/2010	3	WNDW TRIM	WOOD	VARNISH	B	P-50	< LOD	0.03
1759	1/26/2010	2	WNDW TRIM	WOOD	VARNISH	B	P-50	< LOD	0.05
1760	1/26/2010	2	RADIATOR	METAL	GREY	B	P-50	< LOD	0.03
1761	1/26/2010	1	RADIATOR	METAL	GREY	E	P-50	< LOD	0.03
1762	1/26/2010	9	RADIATOR	METAL	GREY	D	P-50	< LOD	0.03
1763	1/26/2010	8	RADIATOR	METAL	GREY	D	P-50	< LOD	0.03
1764	1/26/2010	7	RADIATOR	METAL	GREY	D	P-50	< LOD	0.03
1765	1/26/2010	PORCH REAR	DOOR	METAL	PURPLE	D	P-50	< LOD	0.31
1766	1/26/2010	PORCH REAR	DR. TRIM	WOOD	WHITE	D	P-50	< LOD	0.23
1767	1/26/2010	PORCH REAR	WNDW TRIM	WOOD	WHITE	D	P-50	< LOD	0.03
1768	1/26/2010	PORCH REAR	DOOR	WOOD	GREY	C	P-50	< LOD	0.03
1769	1/26/2010	PORCH REAR	PORCH BALUSTER	WOOD	GREY	B	P-50	< LOD	0.03
1770	1/26/2010	PORCH REAR	PORCH RAIL CAP	WOOD	WHITE	A	P-50	< LOD	0.03

Table 2
XRF Data

Sample #	Sample Date	Sample Location[1]	Component	Substrate	Color	Wall	Unit Number	XRF Reading (mg/cm2)	XRF Error (mg/cm2)
1771	1/26/2010	PORCH REAR	PORCH SIDING	WOOD	GREY	A	P-50	< LOD	0.03
1772	1/26/2010	PORCH REAR	PORCH SIDING	WOOD	GREY	C	P-50	< LOD	0.03
1773	1/26/2010	PORCH REAR	PORCH SIDING	WOOD	GREY	D	P-50	< LOD	0.03
1774	1/26/2010	PORCH REAR	PORCH CEILING	WOOD	GREY	D	P-50	< LOD	0.03
1775	1/26/2010	SRM2573	CALIBRATE - FRONT					1.1	0.1
1776	1/26/2010	1	WALL/MIDDLE	DRYWALL	WHITE	B	P-47	0	0.02
1777	1/26/2010	1	WALL/MIDDLE	DRYWALL	WHITE	C	P-47	0	0.02
1778	1/26/2010	1	WALL/MIDDLE	DRYWALL	WHITE	D	P-47	0	0.02
1779	1/26/2010	1	WALL/MIDDLE	DRYWALL	WHITE	E	P-47	0	0.02
1780	1/26/2010	2	WALL/MIDDLE	DRYWALL	WHITE	A	P-47	0	0.02
1781	1/26/2010	2	WALL/MIDDLE	DRYWALL	WHITE	B	P-47	0	0.02
1782	1/26/2010	2	WALL/MIDDLE	DRYWALL	WHITE	C	P-47	0.01	0.04
1783	1/26/2010	2	WALL/MIDDLE	DRYWALL	WHITE	B	P-47	0.03	0.11
1784	1/26/2010	2	WALL/MIDDLE	DRYWALL	WHITE	D	P-47	0	0.02
1785	1/26/2010	SHUTTER CAL						10.58	0
1786	1/26/2010	3	WALL/MIDDLE	DRYWALL	WHITE	A	P-47	< LOD	0.03

Table 2
XRF Data

Sample #	Sample Date	Sample Location[1]	Component	Substrate	Color	Wall	Unit Number	XRF Reading (mg/cm2)	XRF Error (mg/cm2)
1787	1/26/2010	3	WALL/MIDDLE	DRYWALL	WHITE	B	P-47	< LOD	0.06
1788	1/26/2010	3	WALL/MIDDLE	DRYWALL	WHITE	D	P-47	< LOD	0.03
1789	1/26/2010	4	WALL/MIDDLE	DRYWALL	WHITE	D	P-47	< LOD	0.04
1790	1/26/2010	4	WALL/MIDDLE	DRYWALL	WHITE	C	P-47	< LOD	0.17
1791	1/26/2010	4	WALL/MIDDLE	DRYWALL	WHITE	B	P-47	< LOD	0.03
1792	1/26/2010	4	WALL/MIDDLE	DRYWALL	WHITE	A	P-47	< LOD	0.03
1793	1/26/2010	5	WALL/MIDDLE	DRYWALL	WHITE	A	P-47	< LOD	0.03
1794	1/26/2010	5	WALL/MIDDLE	DRYWALL	WHITE	B	P-47	< LOD	0.03
1795	1/26/2010	5	WALL/MIDDLE	DRYWALL	WHITE	C	P-47	< LOD	0.03
1796	1/26/2010	5	WALL/MIDDLE	DRYWALL	WHITE	D	P-47	< LOD	0.03
1797	1/26/2010	6	WALL/MIDDLE	DRYWALL	WHITE	D	P-47	< LOD	0.03
1798	1/26/2010	6	WALL/MIDDLE	DRYWALL	WHITE	C	P-47	< LOD	0.03
1799	1/26/2010	6	WALL/MIDDLE	DRYWALL	WHITE	B	P-47	< LOD	0.03
1800	1/26/2010	6	WALL/MIDDLE	BURLAP	TAN	A	P-47	< LOD	0.06
1801	1/26/2010	6	CEILING	DRYWALL	WHITE		P-47	< LOD	0.04
1802	1/26/2010	5	CEILING	DRYWALL	WHITE		P-47	< LOD	0.09

Table 2
XRF Data

Sample #	Sample Date	Sample Location[1]	Component	Substrate	Color	Wall	Unit Number	XRF Reading (mg/cm2)	XRF Error (mg/cm2)
1803	1/26/2010	4	CEILING	DRYWALL	WHITE		P-47	< LOD	0.11
1804	1/26/2010	3	CEILING	DRYWALL	WHITE		P-47	< LOD	0.03
1805	1/26/2010	2	CEILING	DRYWALL	WHITE		P-47	< LOD	0.1
1806	1/26/2010	1	CEILING	DRYWALL	WHITE		P-47	< LOD	0.05
1807	1/26/2010	1	CLST SHELF	WOOD	VARNISH	B	P-47	< LOD	0.03
1808	1/26/2010	2	CLST SHELF	WOOD	BROWN	D	P-47	< LOD	0.03
1809	1/26/2010	5	CLST SHELF	WOOD	VARNISH	B	P-47	< LOD	0.03
1810	1/26/2010	5	CLST DOOR	WOOD	VARNISH	B	P-47	< LOD	0.03
1811	1/26/2010	2	CLST DOOR	WOOD	VARNISH	D	P-47	< LOD	0.03
1812	1/26/2010	1	CLST DOOR	WOOD	VARNISH	B	P-47	< LOD	0.03
1813	1/26/2010	1	BASEBOARD	WOOD	VARNISH	B	P-47	< LOD	0.06
1814	1/26/2010	2	BASEBOARD	WOOD	VARNISH	B	P-47	< LOD	0.03
1815	1/26/2010	6	BASEBOARD	WOOD	VARNISH	B	P-47	< LOD	0.03
1816	1/26/2010	5	CBNT FRONT	WOOD	VARNISH	D	P-47	< LOD	0.03
1817	1/26/2010	4	CBNT FRONT	WOOD	VARNISH	D	P-47	< LOD	0.03
1818	1/26/2010	1	DOOR	METAL	WHITE	A	P-47	< LOD	0.07

Table 2
XRF Data

Sample #	Sample Date	Sample Location[1]	Component	Substrate	Color	Wall	Unit Number	XRF Reading (mg/cm2)	XRF Error (mg/cm2)
1819	1/26/2010	1	DR. TRIM	WOOD	VARNISH	A	P-47	< LOD	0.03
1820	1/26/2010	1	DOOR	WOOD	VARNISH	B	P-47	< LOD	0.03
1821	1/26/2010	1	DR. CASING LF	WOOD	VARNISH	E	P-47	< LOD	0.03
1822	1/26/2010	3	DR. TRIM	WOOD	VARNISH	A	P-47	< LOD	0.03
1823	1/26/2010	3	DOOR	WOOD	VARNISH	A	P-47	< LOD	0.03
1824	1/26/2010	6	DOOR	METAL	WHITE	D	P-47	< LOD	1.96
2308	4/26/2010	6	DOOR	METAL	WHITE	D	P-47	< LOD	0.06
1825	1/26/2010	6	DR. TRIM	WOOD	VARNISH	D	P-47	< LOD	0.03
1826	1/26/2010	6	WNDW TRIM	WOOD	VARNISH	D	P-47	< LOD	0.03
1827	1/26/2010	2	WNDW TRIM	WOOD	VARNISH	B	P-47	< LOD	0.03
1828	1/26/2010	2	RADIATOR	METAL	GREY	B	P-47	< LOD	0.03
1829	1/26/2010	1	RADIATOR	METAL	GREY	B	P-47	< LOD	0.03
1830	1/26/2010	6	RADIATOR	METAL	GREY	D	P-47	< LOD	0.03
1831	1/26/2010	PORCH REAR	DOOR	METAL	PURPLE	B	P-47	< LOD	0.05
1832	1/26/2010	PORCH REAR	DR. TRIM	WOOD	WHITE	B	P-47	< LOD	0.03
1833	1/26/2010	PORCH REAR	WNDW TRIM	WOOD	WHITE	B	P-47	< LOD	0.03

Table 2
XRF Data

Sample #	Sample Date	Sample Location[1]	Component	Substrate	Color	Wall	Unit Number	XRF Reading (mg/cm2)	XRF Error (mg/cm2)
1834	1/26/2010	PORCH REAR	PORCH SUP COLUMN	WOOD	WHITE		P-47	< LOD	0.03
1835	1/26/2010	PORCH REAR	PORCH RAIL CAP	WOOD	WHITE		P-47	< LOD	0.03
1836	1/26/2010	PORCH REAR	PORCH CEILING	WOOD	GREY		P-47	< LOD	0.03
1837	1/26/2010	PORCH REAR	PORCH SIDING	WOOD	GREY	A	P-47	< LOD	0.03
1838	1/26/2010	PORCH REAR	PORCH SIDING	WOOD	GREY	B	P-47	< LOD	0.03
1839	1/26/2010	PORCH REAR	PORCH SIDING	WOOD	GREY	C	P-47	< LOD	0.03
1840	1/26/2010	SHUTTER CAL						9.52	0
1841	1/26/2010	SRM2574	CALIBRATE - FRONT					0.7	0.1
1842	1/26/2010	1	WALL/MIDDLE	DRYWALL	WHITE	B	G-21	< LOD	0.03
1843	1/26/2010	1	WALL/MIDDLE	DRYWALL	WHITE	C	G-21	< LOD	0.03
1844	1/26/2010	1	WALL/MIDDLE	DRYWALL	WHITE	D	G-21	< LOD	0.03
1845	1/26/2010	1	WALL/MIDDLE	DRYWALL	WHITE	E	G-21	< LOD	0.03
1846	1/26/2010	2	WALL/MIDDLE	WOOD	VARNISH	A	G-21	< LOD	0.04
1847	1/26/2010	2	WALL/MIDDLE	DRYWALL	WHITE	B	G-21	< LOD	0.04
1848	1/26/2010	2	WALL/MIDDLE	DRYWALL	WHITE	C	G-21	< LOD	0.03
1849	1/26/2010	2	WALL/MIDDLE	DRYWALL	WHITE	D	G-21	< LOD	0.03

Table 2
XRF Data

Sample #	Sample Date	Sample Location[1]	Component	Substrate	Color	Wall	Unit Number	XRF Reading (mg/cm2)	XRF Error (mg/cm2)
1850	1/26/2010	3	WALL/MIDDLE	DRYWALL	WHITE	D	G-21	< LOD	0.05
1851	1/26/2010	3	WALL/MIDDLE	DRYWALL	WHITE	C	G-21	< LOD	0.03
1852	1/26/2010	3	WALL/MIDDLE	DRYWALL	WHITE	B	G-21	< LOD	0.03
1853	1/26/2010	3	WALL/MIDDLE	DRYWALL	WHITE	A	G-21	< LOD	0.03
1854	1/26/2010	4	WALL/MIDDLE	DRYWALL	WHITE	A	G-21	< LOD	0.03
1855	1/26/2010	4	WALL/MIDDLE	DRYWALL	WHITE	B	G-21	< LOD	0.03
1856	1/26/2010	4	WALL/MIDDLE	DRYWALL	WHITE	C	G-21	< LOD	0.03
1857	1/26/2010	4	WALL/MIDDLE	DRYWALL	WHITE	D	G-21	< LOD	0.03
1858	1/26/2010	5	WALL/MIDDLE	DRYWALL	WHITE	D	G-21	< LOD	0.03
1859	1/26/2010	5	WALL/MIDDLE	DRYWALL	WHITE	B	G-21	< LOD	0.03
1860	1/26/2010	5	WALL/MIDDLE	DRYWALL	WHITE	A	G-21	< LOD	0.03
1861	1/26/2010	6	WALL/MIDDLE	DRYWALL	WHITE	A	G-21	< LOD	0.03
1862	1/26/2010	6	WALL/MIDDLE	DRYWALL	WHITE	B	G-21	< LOD	0.03
1863	1/26/2010	6	WALL/MIDDLE	DRYWALL	WHITE	C	G-21	< LOD	0.03
1864	1/26/2010	6	WALL/MIDDLE	DRYWALL	WHITE	D	G-21	< LOD	0.03
1865	1/26/2010	7	WALL/MIDDLE	DRYWALL	WHITE	D	G-21	< LOD	0.03

Table 2
XRF Data

Sample #	Sample Date	Sample Location[1]	Component	Substrate	Color	Wall	Unit Number	XRF Reading (mg/cm2)	XRF Error (mg/cm2)
1866	1/26/2010	7	WALL/MIDDLE	DRYWALL	WHITE	C	G-21	< LOD	0.03
1867	1/26/2010	7	WALL/MIDDLE	DRYWALL	WHITE	B	G-21	< LOD	0.03
1868	1/26/2010	7	WALL/MIDDLE	DRYWALL	WHITE	A	G-21	< LOD	0.03
1869	1/26/2010	8	WALL/MIDDLE	DRYWALL	WHITE	A	G-21	< LOD	0.03
1870	1/26/2010	8	WALL/MIDDLE	DRYWALL	WHITE	B	G-21	< LOD	0.03
1871	1/26/2010	8	WALL/MIDDLE	DRYWALL	WHITE	C	G-21	< LOD	0.1
1872	1/26/2010	8	WALL/MIDDLE	DRYWALL	WHITE	D	G-21	< LOD	0.03
1873	1/26/2010	9	WALL/MIDDLE	DRYWALL	WHITE	D	G-21	< LOD	0.03
1874	1/26/2010	9	WALL/MIDDLE	DRYWALL	WHITE	C	G-21	< LOD	0.03
1875	1/26/2010	9	WALL/MIDDLE	DRYWALL	WHITE	B	G-21	< LOD	0.03
1876	1/26/2010	9	WALL/MIDDLE	DRYWALL	WHITE	A	G-21	< LOD	0.03
1877	1/26/2010	9	CEILING	DRYWALL	WHITE		G-21	< LOD	0.03
1878	1/26/2010	8	CEILING	DRYWALL	WHITE		G-21	< LOD	0.03
1879	1/26/2010	7	CEILING	DRYWALL	WHITE		G-21	< LOD	0.03
1880	1/26/2010	6	CEILING	DRYWALL	WHITE		G-21	< LOD	0.03
1881	1/26/2010	5	CEILING	DRYWALL	WHITE		G-21	< LOD	0.03

Table 2
XRF Data

Sample #	Sample Date	Sample Location[1]	Component	Substrate	Color	Wall	Unit Number	XRF Reading (mg/cm2)	XRF Error (mg/cm2)
1882	1/26/2010	4	CEILING	DRYWALL	WHITE		G-21	< LOD	0.03
1883	1/26/2010	3	CEILING	DRYWALL	WHITE		G-21	< LOD	0.03
1884	1/26/2010	2	CEILING	DRYWALL	WHITE		G-21	< LOD	0.03
1885	1/26/2010	1	CEILING	DRYWALL	WHITE		G-21	< LOD	0.03
1886	1/26/2010	1	CLST SHELF	WOOD	VARNISH	E	G-21	< LOD	0.03
1887	1/26/2010	3	CLST SHELF	WOOD	VARNISH	D	G-21	< LOD	0.03
1888	1/26/2010	SHUTTER CAL						9.6	0
1889	1/26/2010	7	CLST SHELF	WOOD	VARNISH	B	G-21	< LOD	0.03
1890	1/26/2010	8	CLST SHELF	WOOD	VARNISH	B	G-21	< LOD	0.03
1891	1/26/2010	9	CLST SHELF	WOOD	VARNISH	B	G-21	< LOD	0.03
1892	1/26/2010	9	CLST DOOR	WOOD	VARNISH	B	G-21	< LOD	0.03
1893	1/26/2010	8	CLST DOOR	WOOD	VARNISH	B	G-21	< LOD	0.04
1894	1/26/2010	7	CLST DOOR	WOOD	VARNISH	B	G-21	< LOD	0.03
1895	1/26/2010	3	CLST DOOR	WOOD	VARNISH	D	G-21	< LOD	0.06
1896	1/26/2010	1	CLST DOOR	WOOD	VARNISH	E	G-21	< LOD	0.03
1897	1/26/2010	1	BASEBOARD	WOOD	VARNISH	E	G-21	< LOD	0.03

Table 2
XRF Data

Sample #	Sample Date	Sample Location[1]	Component	Substrate	Color	Wall	Unit Number	XRF Reading (mg/cm2)	XRF Error (mg/cm2)
1898	1/26/2010	2	BASEBOARD	WOOD	VARNISH	B	G-21	< LOD	0.03
1899	1/26/2010	6	BASEBOARD	WOOD	VARNISH	B	G-21	< LOD	0.03
1900	1/26/2010	7	BASEBOARD	WOOD	VARNISH	B	G-21	< LOD	0.03
1901	1/26/2010	8	BASEBOARD	WOOD	VARNISH	B	G-21	< LOD	0.03
1902	1/26/2010	9	BASEBOARD	WOOD	VARNISH	B	G-21	< LOD	0.04
1903	1/26/2010	4	CBNT FRONT	WOOD	VARNISH	B	G-21	< LOD	0.03
1904	1/26/2010	3	CBNT FRONT	WOOD	VARNISH	B	G-21	< LOD	0.03
1905	1/26/2010	2	DR. TRIM	WOOD	VARNISH	B	G-21	< LOD	0.03
1906	1/26/2010	2	DOOR	METAL	WHITE	B	G-21	< LOD	0.05
1907	1/26/2010	1	DOOR	METAL	WHITE	A	G-21	< LOD	0.07
1908	1/26/2010	1	DR. TRIM	WOOD	VARNISH	A	G-21	< LOD	0.03
1909	1/26/2010	1	DOOR	WOOD	VARNISH	B	G-21	< LOD	0.03
1910	1/26/2010	1	DR. CASING LF	WOOD	VARNISH	C	G-21	< LOD	0.03
1911	1/26/2010	7	DR. CASING LF	WOOD	VARNISH	A	G-21	< LOD	0.03
1912	1/26/2010	7	DOOR	WOOD	VARNISH	B	G-21	< LOD	0.03
1913	1/26/2010	7	DR. TRIM	WOOD	VARNISH	B	G-21	< LOD	0.03

Table 2
XRF Data

Sample #	Sample Date	Sample Location[1]	Component	Substrate	Color	Wall	Unit Number	XRF Reading (mg/cm2)	XRF Error (mg/cm2)
1914	1/26/2010	7	WNDW TRIM	WOOD	VARNISH	B	G-21	< LOD	0.03
1915	1/26/2010	7	RADIATOR	METAL	GREY	D	G-21	< LOD	0.03
1916	1/26/2010	8	RADIATOR	METAL	GREY	D	G-21	< LOD	0.03
1917	1/26/2010	8	WNDW TRIM	WOOD	VARNISH	D	G-21	< LOD	0.03
1918	1/26/2010	9	WNDW TRIM	WOOD	VARNISH	D	G-21	< LOD	0.03
1919	1/26/2010	9	RADIATOR	METAL	GREY	D	G-21	< LOD	0.03
1920	1/26/2010	2	RADIATOR	METAL	GREY	B	G-21	< LOD	0.03
1921	1/26/2010	1	RADIATOR	METAL	WHITE	E	G-21	< LOD	0.03
1922	1/26/2010	2	WNDW TRIM	WOOD	VARNISH	B	G-21	< LOD	0.03
1923	1/26/2010	3	WNDW TRIM	WOOD	VARNISH	B	G-21	< LOD	0.03
1924	1/26/2010	PORCH REAR	WNDW TRIM	WOOD	WHITE	D	G-21	< LOD	0.03
1925	1/26/2010	PORCH REAR	DR. TRIM	WOOD	WHITE	D	G-21	< LOD	0.03
1926	1/26/2010	PORCH REAR	PORCH SUP COLUMN	WOOD	WHITE	A	G-21	< LOD	0.03
1927	1/26/2010	PORCH REAR	DOOR	WOOD	GREY	C	G-21	< LOD	1.58
2309	4/26/2010	PORCH REAR	DOOR	WOOD	GREY	C	G-21	< LOD	0.03
1928	1/26/2010	PORCH REAR	PORCH SIDING	WOOD	GREY	C	G-21	< LOD	0.03

Table 2
XRF Data

Sample #	Sample Date	Sample Location[1]	Component	Substrate	Color	Wall	Unit Number	XRF Reading (mg/cm2)	XRF Error (mg/cm2)
1929	1/26/2010	PORCH REAR	PORCH SIDING	WOOD	GREY	D	G-21	< LOD	0.03
1930	1/26/2010	PORCH REAR	PORCH CEILING	WOOD	GREY		G-21	< LOD	0.03
1931	1/26/2010	PORCH REAR	DOOR	METAL	PURPLE	D	G-21	< LOD	0.04
1932	1/26/2010	SRM2574	CALIBRATE - FRONT					0.7	0.1
1933	1/26/2010	2	WALL/MIDDLE	DRYWALL	WHITE	A	K-33	0	0.02
1934	1/26/2010	2	WALL/MIDDLE	DRYWALL	WHITE	B	K-33	0	0.02
1935	1/26/2010	2	WALL/MIDDLE	DRYWALL	WHITE	C	K-33	0	0.02
1936	1/26/2010	2	WALL/MIDDLE	DRYWALL	WHITE	D	K-33	0	0.02
1937	1/26/2010	3	WALL/MIDDLE	DRYWALL	WHITE	A	K-33	0	0.02
1938	1/26/2010	3	WALL/MIDDLE	DRYWALL	WHITE	B	K-33	0	0.02
1939	1/26/2010	3	WALL/MIDDLE	WOOD	VARNISH	C	K-33	0.02	0.05
1940	1/26/2010	3	WALL/MIDDLE	DRYWALL	WHITE	D	K-33	0.01	0.07
1941	1/26/2010	3	WALL/MIDDLE	DRYWALL	WHITE	E	K-33	0	0.02
1942	1/26/2010	SHUTTER CAL						9.64	0
1943	1/26/2010	4	WALL/MIDDLE	DRYWALL	WHITE	A	K-33	< LOD	0.03
1944	1/26/2010	4	WALL/MIDDLE	DRYWALL	WHITE	B	K-33	< LOD	0.03

Table 2
XRF Data

Sample #	Sample Date	Sample Location[1]	Component	Substrate	Color	Wall	Unit Number	XRF Reading (mg/cm2)	XRF Error (mg/cm2)
1945	1/26/2010	4	WALL/MIDDLE	DRYWALL	WHITE	D	K-33	< LOD	0.03
1946	1/26/2010	5	WALL/MIDDLE	DRYWALL	WHITE	A	K-33	< LOD	0.03
1947	1/26/2010	5	WALL/MIDDLE	DRYWALL	WHITE	B	K-33	< LOD	0.03
1948	1/26/2010	5	WALL/MIDDLE	DRYWALL	WHITE	C	K-33	< LOD	0.03
1949	1/26/2010	5	CEILING	DRYWALL	WHITE		K-33	< LOD	0.03
1950	1/26/2010	4	CEILING	DRYWALL	WHITE		K-33	< LOD	0.03
1951	1/26/2010	3	CEILING	DRYWALL	WHITE		K-33	< LOD	0.03
1952	1/26/2010	1	CEILING	DRYWALL	WHITE		K-33	< LOD	0.03
1953	1/26/2010	2	CLST SHELF	WOOD	VARNISH	B	K-33	< LOD	0.03
1954	1/26/2010	5	CLST SHELF	WOOD	VARNISH	A	K-33	< LOD	0.03
1955	1/26/2010	5	CLST DOOR	WOOD	VARNISH	A	K-33	< LOD	0.03
1956	1/26/2010	2	CLST DOOR	WOOD	VARNISH	D	K-33	< LOD	0.03
1957	1/26/2010	2	BASEBOARD	WOOD	VARNISH	C	K-33	< LOD	0.07
1958	1/26/2010	3	BASEBOARD	WOOD	VARNISH	B	K-33	< LOD	0.03
1959	1/26/2010	5	BASEBOARD	WOOD	VARNISH	C	K-33	< LOD	0.03
1960	1/26/2010	4	CBNT FRONT	WOOD	VARNISH	A	K-33	< LOD	0.03

Table 2
XRF Data

Sample #	Sample Date	Sample Location[1]	Component	Substrate	Color	Wall	Unit Number	XRF Reading (mg/cm2)	XRF Error (mg/cm2)
1961	1/26/2010	4	TRIM	WOOD	VARNISH	C	K-33	< LOD	0.03
1962	1/26/2010	3	DR. TRIM	WOOD	VARNISH	D	K-33	< LOD	0.03
1963	1/26/2010	3	WNDW TRIM	WOOD	VARNISH	D	K-33	< LOD	0.03
1964	1/26/2010	4	WNDW TRIM	WOOD	VARNISH	A	K-33	< LOD	0.03
1965	1/26/2010	5	RADIATOR	METAL	GREY	B	K-33	< LOD	0.03
1966	1/26/2010	3	RADIATOR	METAL	GREY	D	K-33	< LOD	0.03
1967	1/26/2010	3	DOOR	METAL	WHITE	D	K-33	< LOD	0.06
1968	1/26/2010	1	DOOR	METAL	WHITE	A	K-33	< LOD	0.18
1969	1/26/2010	1	DR. TRIM	WOOD	VARNISH	A	K-33	< LOD	0.03
1970	1/26/2010	1	STR HAND RAIL	WOOD	VARNISH	B	K-33	< LOD	0.03
1971	1/26/2010	1	STR BASEBOARD	WOOD	WHITE	B	K-33	< LOD	0.03
1972	1/26/2010	1	STR RAIL CAP	WOOD	WHITE	C	K-33	< LOD	0.06
1973	1/26/2010	1	WALL/MIDDLE	DRYWALL	WHITE	A	K-33	< LOD	0.03
1974	1/26/2010	1	WALL/MIDDLE	DRYWALL	WHITE	B	K-33	< LOD	0.03
1975	1/26/2010	1	WALL/MIDDLE	DRYWALL	WHITE	C	K-33	< LOD	0.03
1976	1/26/2010	6	WALL/MIDDLE	DRYWALL	WHITE	A	K-33	< LOD	0.03

Table 2
XRF Data

Sample #	Sample Date	Sample Location[1]	Component	Substrate	Color	Wall	Unit Number	XRF Reading (mg/cm2)	XRF Error (mg/cm2)
1977	1/26/2010	6	WALL/MIDDLE	DRYWALL	WHITE	B	K-33	< LOD	0.04
1978	1/26/2010	6	WALL/MIDDLE	DRYWALL	WHITE	C	K-33	< LOD	0.03
1979	1/26/2010	6	WALL/MIDDLE	DRYWALL	WHITE	D	K-33	< LOD	0.03
1980	1/26/2010	7	WALL/MIDDLE	DRYWALL	WHITE	C	K-33	< LOD	0.03
1981	1/26/2010	7	WALL/MIDDLE	DRYWALL	WHITE	B	K-33	< LOD	0.03
1982	1/26/2010	7	WALL/MIDDLE	DRYWALL	WHITE	A	K-33	< LOD	0.03
1983	1/26/2010	8	WALL/MIDDLE	DRYWALL	WHITE	A	K-33	< LOD	0.03
1984	1/26/2010	8	WALL/MIDDLE	DRYWALL	WHITE	B	K-33	< LOD	0.03
1985	1/26/2010	8	WALL/MIDDLE	DRYWALL	WHITE	C	K-33	< LOD	0.03
1986	1/26/2010	8	WALL/MIDDLE	DRYWALL	WHITE	D	K-33	< LOD	0.03
1987	1/26/2010	9	WALL/MIDDLE	DRYWALL	WHITE	A	K-33	< LOD	0.03
1988	1/26/2010	9	WALL/MIDDLE	DRYWALL	WHITE	B	K-33	< LOD	0.03
1989	1/26/2010	9	WALL/MIDDLE	DRYWALL	WHITE	C	K-33	< LOD	0.03
1990	1/26/2010	9	WALL/MIDDLE	DRYWALL	WHITE	D	K-33	< LOD	0.03
1991	1/26/2010	9	CEILING	DRYWALL	WHITE		K-33	< LOD	0.03
1992	1/26/2010	SHUTTER CAL						8.99	0

Table 2
XRF Data

Sample #	Sample Date	Sample Location[1]	Component	Substrate	Color	Wall	Unit Number	XRF Reading (mg/cm2)	XRF Error (mg/cm2)
1993	1/26/2010	8	CEILING	DRYWALL	WHITE		K-33	< LOD	0.03
1994	1/26/2010	7	CEILING	DRYWALL	WHITE		K-33	< LOD	0.03
1995	1/26/2010	6	CEILING	DRYWALL	WHITE		K-33	< LOD	0.03
1996	1/26/2010	6	CLST SHELF	WOOD	VARNISH	D	K-33	< LOD	0.03
1997	1/26/2010	9	CLST SHELF	WOOD	VARNISH	B	K-33	< LOD	0.03
1998	1/26/2010	9	CLST DOOR	WOOD	VARNISH	B	K-33	< LOD	0.03
1999	1/26/2010	6	CLST DOOR	WOOD	VARNISH	D	K-33	< LOD	0.03
2000	1/26/2010	6	BASEBOARD	WOOD	VARNISH	D	K-33	< LOD	0.03
2001	1/26/2010	9	BASEBOARD	WOOD	VARNISH	C	K-33	< LOD	0.03
2002	1/26/2010	7	CBNT FRONT	WOOD	VARNISH	C	K-33	< LOD	0.03
2003	1/26/2010	6	DOOR	WOOD	VARNISH	C	K-33	< LOD	0.03
2004	1/26/2010	6	DR. CASING LF	WOOD	VARNISH	D	K-33	< LOD	0.03
2005	1/26/2010	6	DR. TRIM	WOOD	VARNISH	A	K-33	< LOD	0.03
2006	1/26/2010	9	WNDW TRIM	WOOD	VARNISH	A	K-33	< LOD	0.03
2007	1/26/2010	9	RADIATOR	METAL	GREY	A	K-33	< LOD	0.03
2008	1/26/2010	PORCH REAR	DOOR	METAL	BLUE	A	K-33	< LOD	0.13

Table 2
XRF Data

Sample #	Sample Date	Sample Location[1]	Component	Substrate	Color	Wall	Unit Number	XRF Reading (mg/cm2)	XRF Error (mg/cm2)
2009	1/26/2010	PORCH REAR	DOOR	WOOD	GREY	C	K-33	< LOD	0.75
2010	1/26/2010	PORCH REAR	DR. TRIM	WOOD	WHITE	C	K-33	< LOD	0.03
2011	1/26/2010	PORCH REAR	WNDW TRIM	WOOD	WHITE	A	K-33	< LOD	0.03
2012	1/26/2010	PORCH REAR	PORCH CEILING	WOOD	GREY	A	K-33	< LOD	0.06
2013	1/26/2010	PORCH REAR	PORCH SIDING	WOOD	GREY	A	K-33	< LOD	0.03
2014	1/26/2010	PORCH REAR	PORCH SIDING	WOOD	GREY	B	K-33	< LOD	0.03
2015	1/26/2010	PORCH REAR	PORCH SIDING	WOOD	GREY	C	K-33	< LOD	0.03
2016	1/26/2010	SRM2575	CALIBRATE - FRONT					0.3	0.06
2017	1/26/2010	2	WALL/MIDDLE	DRYWALL	WHITE	A	K-31	0.01	0.04
2018	1/26/2010	2	WALL/MIDDLE	DRYWALL	WHITE	B	K-31	0	0.02
2019	1/26/2010	2	WALL/MIDDLE	DRYWALL	WHITE	C	K-31	0.01	0.02
2020	1/26/2010	2	WALL/MIDDLE	DRYWALL	WHITE	D	K-31	0	0.02
2021	1/26/2010	3	WALL/MIDDLE	DRYWALL	WHITE	A	K-31	0	0.02
2022	1/26/2010	3	WALL/MIDDLE	DRYWALL	WHITE	B	K-31	0	0.02
2023	1/26/2010	3	WALL/MIDDLE	WOOD	VARNISH	C	K-31	0.01	0.03
2024	1/26/2010	3	WALL/MIDDLE	DRYWALL	WHITE	D	K-31	0	0.02

Table 2
XRF Data

Sample #	Sample Date	Sample Location[1]	Component	Substrate	Color	Wall	Unit Number	XRF Reading (mg/cm2)	XRF Error (mg/cm2)
2025	1/26/2010	3	WALL/MIDDLE	DRYWALL	WHITE	E	K-31	0	0.02
2026	1/26/2010	4	WALL/MIDDLE	DRYWALL	WHITE	A	K-31	0	0.02
2027	1/26/2010	4	WALL/MIDDLE	DRYWALL	WHITE	B	K-31	0	0.02
2028	1/26/2010	4	WALL/MIDDLE	DRYWALL	WHITE	D	K-31	0	0.02
2029	1/26/2010	5	WALL/MIDDLE	DRYWALL	WHITE	A	K-31	0	0.02
2030	1/26/2010	5	WALL/MIDDLE	DRYWALL	WHITE	B	K-31	0	0.02
2031	1/26/2010	5	WALL/MIDDLE	DRYWALL	WHITE	C	K-31	0	0.02
2032	1/26/2010	5	CEILING	DRYWALL	WHITE		K-31	0	0.02
2033	1/26/2010	4	CEILING	DRYWALL	WHITE		K-31	0	0.02
2034	1/26/2010	3	CEILING	DRYWALL	WHITE		K-31	0	0.02
2035	1/26/2010	1	CEILING	DRYWALL	WHITE		K-31	0	0.02
2036	1/26/2010	2	CLST SHELF	WOOD	VARNISH	B	K-31	0	0.02
2037	1/26/2010	5	CLST SHELF	WOOD	VARNISH	A	K-31	0	0.02
2038	1/26/2010	5	CLST DOOR	WOOD	VARNISH	A	K-31	0	0.02
2039	1/26/2010	2	CLST DOOR	WOOD	VARNISH	D	K-31	0	0.02
2040	1/26/2010	2	BASEBOARD	WOOD	VARNISH	C	K-31	0	0.02

Table 2
XRF Data

Sample #	Sample Date	Sample Location[1]	Component	Substrate	Color	Wall	Unit Number	XRF Reading (mg/cm2)	XRF Error (mg/cm2)
2041	1/26/2010	SHUTTER CAL						9.7	0
2042	1/26/2010	3	BASEBOARD	WOOD	VARNISH	C	K-31	< LOD	0.05
2043	1/26/2010	5	BASEBOARD	WOOD	VARNISH	C	K-31	< LOD	0.03
2044	1/26/2010	4	CBNT FRONT	WOOD	VARNISH	A	K-31	< LOD	0.03
2045	1/26/2010	4	TRIM	WOOD	VARNISH	C	K-31	< LOD	0.06
2046	1/26/2010	5	DR. TRIM	WOOD	VARNISH	A	K-31	< LOD	0.03
2047	1/26/2010	1	DR. TRIM	WOOD	VARNISH	A	K-31	< LOD	0.08
2048	1/26/2010	1	DOOR	METAL	WHITE	A	K-31	< LOD	0.14
2049	1/26/2010	3	DOOR	METAL	WHITE	D	K-31	< LOD	0.03
2050	1/26/2010	3	DR. TRIM	WOOD	VARNISH	D	K-31	< LOD	0.03
2051	1/26/2010	3	WNDW TRIM	WOOD	VARNISH	D	K-31	< LOD	0.03
2052	1/26/2010	4	WNDW TRIM	WOOD	VARNISH	A	K-31	< LOD	0.1
2053	1/26/2010	5	RADIATOR	METAL	WHITE	B	K-31	< LOD	0.03
2054	1/26/2010	3	RADIATOR	METAL	GREY	C	K-31	< LOD	0.03
2055	1/26/2010	1	STR HAND RAIL	WOOD	VARNISH	B	K-31	< LOD	0.06
2056	1/26/2010	1	STR RAIL CAP	WOOD	VARNISH	C	K-31	< LOD	0.03

Table 2
XRF Data

Sample #	Sample Date	Sample Location[1]	Component	Substrate	Color	Wall	Unit Number	XRF Reading (mg/cm2)	XRF Error (mg/cm2)
2057	1/26/2010	1	STR BASEBOARD	WOOD	WHITE	C	K-31	< LOD	0.03
2058	1/26/2010	1	WALL/MIDDLE	DRYWALL	WHITE	A	K-31	< LOD	0.03
2059	1/26/2010	1	WALL/MIDDLE	DRYWALL	WHITE	B	K-31	< LOD	0.08
2060	1/26/2010	1	WALL/MIDDLE	DRYWALL	WHITE	C	K-31	< LOD	0.03
2061	1/26/2010	6	WALL/MIDDLE	DRYWALL	WHITE	A	K-31	< LOD	0.03
2062	1/26/2010	6	WALL/MIDDLE	DRYWALL	WHITE	B	K-31	< LOD	0.03
2063	1/26/2010	6	WALL/MIDDLE	DRYWALL	WHITE	C	K-31	< LOD	0.03
2064	1/26/2010	6	WALL/MIDDLE	DRYWALL	WHITE	D	K-31	< LOD	0.03
2065	1/26/2010	7	WALL/MIDDLE	DRYWALL	WHITE	D	K-31	< LOD	0.03
2066	1/26/2010	7	WALL/MIDDLE	DRYWALL	WHITE	C	K-31	< LOD	0.03
2067	1/26/2010	7	WALL/MIDDLE	DRYWALL	WHITE	B	K-31	< LOD	0.03
2068	1/26/2010	7	WALL/MIDDLE	DRYWALL	WHITE	A	K-31	< LOD	0.03
2069	1/26/2010	8	WALL/MIDDLE	DRYWALL	WHITE	A	K-31	< LOD	0.03
2070	1/26/2010	8	WALL/MIDDLE	DRYWALL	WHITE	B	K-31	< LOD	0.03
2071	1/26/2010	8	WALL/MIDDLE	DRYWALL	WHITE	C	K-31	< LOD	0.03
2072	1/26/2010	9	WALL/MIDDLE	DRYWALL	WHITE	A	K-31	< LOD	0.03

Table 2
XRF Data

Sample #	Sample Date	Sample Location[1]	Component	Substrate	Color	Wall	Unit Number	XRF Reading (mg/cm2)	XRF Error (mg/cm2)
2073	1/26/2010	9	WALL/MIDDLE	DRYWALL	WHITE	B	K-31	< LOD	0.03
2074	1/26/2010	9	WALL/MIDDLE	DRYWALL	WHITE	C	K-31	< LOD	0.05
2075	1/26/2010	9	WALL/MIDDLE	DRYWALL	WHITE	D	K-31	< LOD	0.03
2076	1/26/2010	10	WALL/MIDDLE	DRYWALL	WHITE	D	K-31	< LOD	0.05
2077	1/26/2010	10	WALL/MIDDLE	DRYWALL	WHITE	C	K-31	< LOD	0.03
2078	1/26/2010	10	WALL/MIDDLE	DRYWALL	WHITE	B	K-31	< LOD	0.03
2079	1/26/2010	10	WALL/MIDDLE	DRYWALL	WHITE	A	K-31	< LOD	0.03
2080	1/26/2010	10	CEILING	DRYWALL	WHITE		K-31	< LOD	0.03
2081	1/26/2010	9	CEILING	DRYWALL	WHITE		K-31	< LOD	0.03
2082	1/26/2010	8	CEILING	DRYWALL	WHITE		K-31	< LOD	0.05
2083	1/26/2010	7	CEILING	DRYWALL	WHITE		K-31	< LOD	0.03
2084	1/26/2010	6	CEILING	DRYWALL	WHITE		K-31	< LOD	0.07
2085	1/26/2010	6	CLST SHELF	WOOD	VARNISH	D	K-31	< LOD	0.03
2086	1/26/2010	7	CLST SHELF	WOOD	VARNISH	A	K-31	< LOD	0.03
2087	1/26/2010	10	CLST SHELF	WOOD	VARNISH	B	K-31	< LOD	0.03
2088	1/26/2010	10	CLST DOOR	WOOD	VARNISH	B	K-31	< LOD	0.03

Table 2
XRF Data

Sample #	Sample Date	Sample Location[1]	Component	Substrate	Color	Wall	Unit Number	XRF Reading (mg/cm2)	XRF Error (mg/cm2)
2089	1/26/2010	7	CLST DOOR	WOOD	VARNISH	A	K-31	< LOD	0.03
2090	1/26/2010	6	CLST DOOR	WOOD	VARNISH	D	K-31	< LOD	0.03
2091	1/26/2010	6	BASEBOARD	WOOD	VARNISH	B	K-31	< LOD	0.03
2092	1/26/2010	7	BASEBOARD	WOOD	VARNISH	B	K-31	< LOD	0.03
2093	1/26/2010	10	BASEBOARD	WOOD	VARNISH	C	K-31	< LOD	0.03
2094	1/26/2010	SHUTTER CAL						9.63	0
2095	1/26/2010	8	CBNT FRONT	WOOD	VARNISH	C	K-31	< LOD	0.03
2096	1/26/2010	6	DOOR	WOOD	VARNISH	C	K-31	< LOD	0.03
2097	1/26/2010	6	DR. CASING LF	WOOD	VARNISH	D	K-31	< LOD	0.03
2098	1/26/2010	6	DR. TRIM	WOOD	VARNISH	A	K-31	< LOD	0.03
2099	1/26/2010	9	DR. TRIM	WOOD	VARNISH	C	K-31	< LOD	0.03
2100	1/26/2010	9	DOOR	WOOD	VARNISH	C	K-31	< LOD	0.03
2101	1/26/2010	7	WNDW TRIM	WOOD	VARNISH	C	K-31	< LOD	0.03
2102	1/26/2010	10	WNDW TRIM	WOOD	VARNISH	A	K-31	< LOD	0.03
2103	1/26/2010	10	RADIATOR	METAL	GREY	A	K-31	< LOD	0.03
2104	1/26/2010	7	RADIATOR	METAL	GREY	C	K-31	< LOD	0.03

Table 2
XRF Data

Sample #	Sample Date	Sample Location[1]	Component	Substrate	Color	Wall	Unit Number	XRF Reading (mg/cm2)	XRF Error (mg/cm2)
2105	1/26/2010	PORCH REAR	DOOR	METAL	WHITE	C	K-31	< LOD	0.03
2106	1/26/2010	PORCH REAR	DOOR	WOOD	GREY	B	K-31	< LOD	0.03
2107	1/26/2010	PORCH REAR	DR. TRIM	WOOD	WHITE	B	K-31	< LOD	0.03
2108	1/26/2010	PORCH REAR	WNDW TRIM	WOOD	WHITE	A	K-31	< LOD	0.03
2109	1/26/2010	PORCH REAR	PORCH SIDING	WOOD	GREY	A	K-31	0.5	0.3
2110	1/26/2010	PORCH REAR	PORCH SIDING	WOOD	GREY	B	K-31	< LOD	0.03
2111	1/26/2010	PORCH REAR	PORCH CEILING	WOOD	GREY	B	K-31	< LOD	0.03
2112	1/26/2010	SRM2571	CALIBRATE - FRONT					3.8	0.2
2113	1/26/2010	2	WALL/MIDDLE	DRYWALL	WHITE	A	L-38	0	0.02
2114	1/26/2010	2	WALL/MIDDLE	DRYWALL	WHITE	B	L-38	0.01	0.04
2115	1/26/2010	2	WALL/MIDDLE	DRYWALL	WHITE	C	L-38	0	0.02
2116	1/26/2010	3	WALL/MIDDLE	DRYWALL	WHITE	A	L-38	0	0.02
2117	1/26/2010	3	WALL/MIDDLE	DRYWALL	WHITE	B	L-38	0	0.02
2118	1/26/2010	3	WALL/MIDDLE	DRYWALL	WHITE	C	L-38	0	0.02
2119	1/26/2010	3	WALL/MIDDLE	DRYWALL	WHITE	D	L-38	0	0.02
2120	1/26/2010	4	WALL/MIDDLE	DRYWALL	WHITE	A	L-38	0	0.02

Table 2
XRF Data

Sample #	Sample Date	Sample Location[1]	Component	Substrate	Color	Wall	Unit Number	XRF Reading (mg/cm2)	XRF Error (mg/cm2)
2121	1/26/2010	4	WALL/MIDDLE	DRYWALL	WHITE	B	L-38	0	0.02
2122	1/26/2010	4	WALL/MIDDLE	DRYWALL	WHITE	C	L-38	0	0.02
2123	1/26/2010	4	WALL/MIDDLE	WOOD	VARNISH	D	L-38	0.03	0.05
2124	1/26/2010	4	WALL/MIDDLE	DRYWALL	WHITE	E	L-38	0	0.02
2125	1/26/2010	5	WALL/MIDDLE	DRYWALL	WHITE	A	L-38	0	0.02
2126	1/26/2010	5	WALL/MIDDLE	DRYWALL	WHITE	B	L-38	0	0.02
2127	1/26/2010	5	WALL/MIDDLE	DRYWALL	WHITE	C	L-38	0	0.02
2128	1/26/2010	5	WALL/MIDDLE	DRYWALL	WHITE	D	L-38	0	0.02
2129	1/26/2010	4	CEILING	DRYWALL	WHITE		L-38	0	0.02
2130	1/26/2010	3	CEILING	DRYWALL	WHITE		L-38	0	0.02
2131	1/26/2010	2	CEILING	DRYWALL	WHITE		L-38	0	0.02
2132	1/26/2010	1	CEILING	DRYWALL	WHITE		L-38	0	0.02
2133	1/26/2010	5	CLST SHELF	WOOD	VARNISH	D	L-38	0	0.02
2134	1/26/2010	5	CLST DOOR	WOOD	VARNISH	B	L-38	0	0.02
2135	1/26/2010	2	CLST DOOR	WOOD	VARNISH	A	L-38	0	0.02
2136	1/26/2010	2	CLST DOOR	WOOD	VARNISH	A	L-38	0	0.02

Table 2
XRF Data

Sample #	Sample Date	Sample Location[1]	Component	Substrate	Color	Wall	Unit Number	XRF Reading (mg/cm2)	XRF Error (mg/cm2)
2137	1/26/2010	4	BASEBOARD	WOOD	VARNISH	A	L-38	0	0.02
2138	1/26/2010	5	BASEBOARD	WOOD	VARNISH	A	L-38	0	0.02
2139	1/26/2010	SHUTTER CAL						10.3	0
2140	1/26/2010	3	CBNT FRONT	WOOD	VARNISH	A	L-38	< LOD	0.03
2141	1/26/2010	3	TRIM	WOOD	VARNISH	C	L-38	< LOD	0.03
2142	1/26/2010	4	DOOR	METAL	WHITE	C	L-38	< LOD	0.03
2143	1/26/2010	4	DR. TRIM	WOOD	VARNISH	C	L-38	< LOD	0.03
2144	1/26/2010	1	DR. TRIM	WOOD	VARNISH	A	L-38	< LOD	0.03
2145	1/26/2010	1	DOOR	METAL	WHITE	A	L-38	< LOD	0.04
2146	1/26/2010	3	WNDW TRIM	WOOD	VARNISH	A	L-38	< LOD	0.03
2147	1/26/2010	4	WNDW TRIM	WOOD	VARNISH	C	L-38	< LOD	0.03
2148	1/26/2010	4	RADIATOR	METAL	GREY	C	L-38	< LOD	0.03
2149	1/26/2010	2	RADIATOR	METAL	WHITE	C	L-38	< LOD	0.03
2150	1/26/2010	1	STR RAIL CAP	WOOD	VARNISH	B	L-38	< LOD	0.03
2151	1/26/2010	1	STR HAND RAIL	WOOD	VARNISH	C	L-38	< LOD	0.03
2152	1/26/2010	1	STR BASEBOARD	WOOD	WHITE	C	L-38	< LOD	0.07

Table 2
XRF Data

Sample #	Sample Date	Sample Location[1]	Component	Substrate	Color	Wall	Unit Number	XRF Reading (mg/cm2)	XRF Error (mg/cm2)
2153	1/26/2010	1	WALL/MIDDLE	DRYWALL	WHITE	A	L-38	< LOD	0.03
2154	1/26/2010	1	WALL/MIDDLE	DRYWALL	WHITE	B	L-38	< LOD	0.03
2155	1/26/2010	1	WALL/MIDDLE	DRYWALL	WHITE	C	L-38	< LOD	0.03
2156	1/26/2010	6	WALL/MIDDLE	DRYWALL	WHITE	A	L-38	< LOD	0.04
2157	1/26/2010	6	WALL/MIDDLE	DRYWALL	WHITE	B	L-38	< LOD	0.03
2158	1/26/2010	6	WALL/MIDDLE	DRYWALL	WHITE	C	L-38	< LOD	0.03
2159	1/26/2010	6	WALL/MIDDLE	DRYWALL	WHITE	D	L-38	< LOD	0.03
2160	1/26/2010	7	WALL/MIDDLE	DRYWALL	WHITE	A	L-38	< LOD	0.03
2161	1/26/2010	7	WALL/MIDDLE	DRYWALL	WHITE	B	L-38	< LOD	0.03
2162	1/26/2010	7	WALL/MIDDLE	DRYWALL	WHITE	C	L-38	< LOD	0.03
2163	1/26/2010	7	WALL/MIDDLE	DRYWALL	WHITE	D	L-38	< LOD	0.04
2164	1/26/2010	8	WALL/MIDDLE	DRYWALL	WHITE	D	L-38	< LOD	0.03
2165	1/26/2010	8	WALL/MIDDLE	DRYWALL	WHITE	C	L-38	< LOD	0.03
2166	1/26/2010	8	WALL/MIDDLE	DRYWALL	WHITE	B	L-38	< LOD	0.03
2167	1/26/2010	8	WALL/MIDDLE	DRYWALL	WHITE	A	L-38	< LOD	0.03
2168	1/26/2010	9	WALL/MIDDLE	DRYWALL	WHITE	A	L-38	< LOD	0.03

Table 2
XRF Data

Sample #	Sample Date	Sample Location[1]	Component	Substrate	Color	Wall	Unit Number	XRF Reading (mg/cm2)	XRF Error (mg/cm2)
2169	1/26/2010	9	WALL/MIDDLE	DRYWALL	WHITE	C	L-38	< LOD	0.03
2170	1/26/2010	9	WALL/MIDDLE	DRYWALL	WHITE	D	L-38	< LOD	0.03
2171	1/26/2010	10	WALL/MIDDLE	DRYWALL	WHITE	D	L-38	< LOD	0.03
2172	1/26/2010	10	WALL/MIDDLE	DRYWALL	WHITE	C	L-38	< LOD	0.03
2173	1/26/2010	10	WALL/MIDDLE	DRYWALL	WHITE	B	L-38	< LOD	0.03
2174	1/26/2010	10	WALL/MIDDLE	DRYWALL	WHITE	A	L-38	< LOD	0.03
2175	1/26/2010	10	CEILING	DRYWALL	WHITE		L-38	< LOD	0.03
2176	1/26/2010	9	CEILING	DRYWALL	WHITE		L-38	< LOD	0.03
2177	1/26/2010	8	CEILING	DRYWALL	WHITE		L-38	< LOD	0.03
2178	1/26/2010	7	CEILING	DRYWALL	WHITE		L-38	< LOD	0.03
2179	1/26/2010	6	CEILING	DRYWALL	WHITE		L-38	< LOD	0.03
2180	1/26/2010	6	CLST SHELF	WOOD	BROWN	B	L-38	< LOD	0.03
2181	1/26/2010	7	CLST SHELF	WOOD	BROWN	D	L-38	< LOD	0.03
2182	1/26/2010	10	CLST SHELF	WOOD	BROWN	A	L-38	< LOD	0.03
2183	1/26/2010	10	CLST DOOR	WOOD	VARNISH	A	L-38	< LOD	0.03
2184	1/26/2010	7	CLST DOOR	WOOD	VARNISH	D	L-38	< LOD	0.03

Table 2
XRF Data

Sample #	Sample Date	Sample Location[1]	Component	Substrate	Color	Wall	Unit Number	XRF Reading (mg/cm2)	XRF Error (mg/cm2)
2185	1/26/2010	6	CLST DOOR	WOOD	VARNISH	B	L-38	< LOD	0.03
2186	1/26/2010	6	BASEBOARD	WOOD	VARNISH	B	L-38	< LOD	0.03
2187	1/26/2010	7	BASEBOARD	WOOD	VARNISH	B	L-38	< LOD	0.03
2188	1/26/2010	10	BASEBOARD	WOOD	VARNISH	B	L-38	< LOD	0.06
2189	1/26/2010	SHUTTER CAL						9.99	0
2190	1/26/2010	9	CBNT FRONT	WOOD	VARNISH	C	L-38	< LOD	0.03
2191	1/26/2010	8	DOOR	WOOD	VARNISH	C	L-38	< LOD	0.03
2192	1/26/2010	8	DR. TRIM	WOOD	VARNISH	C	L-38	< LOD	0.03
2193	1/26/2010	6	DR. CASING LF	WOOD	VARNISH	B	L-38	< LOD	0.03
2194	1/26/2010	6	DOOR	WOOD	VARNISH	A	L-38	< LOD	0.03
2195	1/26/2010	6	DR. TRIM	WOOD	VARNISH	C	L-38	< LOD	0.03
2196	1/26/2010	7	WNDW TRIM	WOOD	VARNISH	A	L-38	< LOD	0.03
2197	1/26/2010	10	WNDW TRIM	WOOD	VARNISH	C	L-38	< LOD	0.03
2198	1/26/2010	10	RADIATOR	METAL	GREY	C	L-38	< LOD	0.03
2199	1/26/2010	7	RADIATOR	METAL	GREY	A	L-38	< LOD	0.03
2200	1/26/2010	PORCH REAR	DOOR	METAL	GREEN	A	L-38	1.7	0.4

Table 2
XRF Data

Sample #	Sample Date	Sample Location[1]	Component	Substrate	Color	Wall	Unit Number	XRF Reading (mg/cm2)	XRF Error (mg/cm2)
2201	1/26/2010	PORCH REAR	DOOR	METAL	GREEN	A	L-38	1.7	0.4
2202	1/26/2010	PORCH REAR	DR. TRIM	WOOD	WHITE	A	L-38	< LOD	0.03
2203	1/26/2010	PORCH REAR	WNDW TRIM	WOOD	WHITE	A	L-38	< LOD	0.03
2204	1/26/2010	PORCH REAR	DOOR	WOOD	GREY	B	L-38	< LOD	0.22
2205	1/26/2010	PORCH REAR	PORCH SIDING	WOOD	GREY	B	L-38	< LOD	0.03
2206	1/26/2010	PORCH REAR	PORCH SIDING	WOOD	GREY	A	L-38	< LOD	0.03
2207	1/26/2010	PORCH REAR	PORCH CEILING	WOOD	GREY		L-38	< LOD	0.03
2208	1/26/2010	SRM2572	CALIBRATE - FRONT					1.6	0.3
2209	1/26/2010	1	WALL/MIDDLE	DRYWALL	WHITE	B	Q-53	0	0.02
2210	1/26/2010	1	WALL/MIDDLE	DRYWALL	WHITE	C	Q-53	0	0.02
2211	1/26/2010	1	WALL/MIDDLE	DRYWALL	WHITE	D	Q-53	0	0.02
2212	1/26/2010	1	WALL/MIDDLE	DRYWALL	WHITE	E	Q-53	0	0.02
2213	1/26/2010	2	WALL/MIDDLE	BURLAP	WHITE	A	Q-53	0	0.02
2214	1/26/2010	2	WALL/MIDDLE	DRYWALL	WHITE	B	Q-53	0	0.02
2215	1/26/2010	2	WALL/MIDDLE	DRYWALL	WHITE	C	Q-53	0.01	0.03
2216	1/26/2010	2	WALL/MIDDLE	DRYWALL	WHITE	D	Q-53	0	0.02

Table 2
XRF Data

Sample #	Sample Date	Sample Location[1]	Component	Substrate	Color	Wall	Unit Number	XRF Reading (mg/cm2)	XRF Error (mg/cm2)
2217	1/26/2010	3	WALL/MIDDLE	DRYWALL	WHITE	D	Q-53	0	0.02
2218	1/26/2010	3	WALL/MIDDLE	DRYWALL	WHITE	C	Q-53	0	0.02
2219	1/26/2010	3	WALL/MIDDLE	DRYWALL	WHITE	B	Q-53	0	0.02
2220	1/26/2010	3	WALL/MIDDLE	DRYWALL	WHITE	A	Q-53	0.01	0.03
2221	1/26/2010	4	WALL/MIDDLE	DRYWALL	WHITE	A	Q-53	0	0.02
2222	1/26/2010	4	WALL/MIDDLE	DRYWALL	WHITE	B	Q-53	0	0.02
2223	1/26/2010	4	WALL/MIDDLE	DRYWALL	WHITE	C	Q-53	0	0.02
2224	1/26/2010	4	WALL/MIDDLE	DRYWALL	WHITE	D	Q-53	0	0.02
2225	1/26/2010	5	WALL/MIDDLE	DRYWALL	WHITE	D	Q-53	0	0.02
2226	1/26/2010	5	WALL/MIDDLE	DRYWALL	WHITE	B	Q-53	0	0.02
2227	1/26/2010	5	WALL/MIDDLE	DRYWALL	WHITE	A	Q-53	0	0.02
2228	1/26/2010	6	WALL/MIDDLE	DRYWALL	WHITE	A	Q-53	0	0.02
2229	1/26/2010	6	WALL/MIDDLE	DRYWALL	WHITE	B	Q-53	0	0.02
2230	1/26/2010	6	WALL/MIDDLE	DRYWALL	WHITE	C	Q-53	0	0.02
2231	1/26/2010	6	WALL/MIDDLE	DRYWALL	WHITE	D	Q-53	0	0.02
2232	1/26/2010	7	WALL/MIDDLE	DRYWALL	WHITE	D	Q-53	0.01	0.03

Table 2
XRF Data

Sample #	Sample Date	Sample Location[1]	Component	Substrate	Color	Wall	Unit Number	XRF Reading (mg/cm2)	XRF Error (mg/cm2)
2233	1/26/2010	7	WALL/MIDDLE	DRYWALL	WHITE	C	Q-53	0.02	0.09
2234	1/26/2010	7	WALL/MIDDLE	DRYWALL	WHITE	B	Q-53	0	0.02
2235	1/26/2010	7	WALL/MIDDLE	DRYWALL	WHITE	A	Q-53	0	0.02
2236	1/26/2010	8	WALL/MIDDLE	DRYWALL	WHITE	A	Q-53	0	0.02
2237	1/26/2010	8	WALL/MIDDLE	DRYWALL	WHITE	B	Q-53	0	0.02
2238	1/26/2010	8	WALL/MIDDLE	DRYWALL	WHITE	C	Q-53	0.01	0.03
2239	1/26/2010	8	WALL/MIDDLE	DRYWALL	WHITE	D	Q-53	0	0.02
2240	1/26/2010	SHUTTER CAL						9.3	0
2241	1/26/2010	9	WALL/MIDDLE	DRYWALL	WHITE	A	Q-53	< LOD	0.03
2242	1/26/2010	9	WALL/MIDDLE	DRYWALL	WHITE	B	Q-53	< LOD	0.03
2243	1/26/2010	9	WALL/MIDDLE	DRYWALL	WHITE	C	Q-53	< LOD	0.03
2244	1/26/2010	9	WALL/MIDDLE	DRYWALL	WHITE	D	Q-53	< LOD	0.03
2245	1/26/2010	9	CEILING	DRYWALL	WHITE		Q-53	< LOD	0.03
2246	1/26/2010	8	CEILING	DRYWALL	WHITE		Q-53	< LOD	0.03
2247	1/26/2010	7	CEILING	DRYWALL	WHITE		Q-53	< LOD	0.03
2248	1/26/2010	6	CEILING	DRYWALL	WHITE		Q-53	< LOD	0.03

Table 2
XRF Data

Sample #	Sample Date	Sample Location[1]	Component	Substrate	Color	Wall	Unit Number	XRF Reading (mg/cm2)	XRF Error (mg/cm2)
2249	1/26/2010	5	CEILING	DRYWALL	WHITE		Q-53	< LOD	0.03
2250	1/26/2010	4	CEILING	DRYWALL	WHITE		Q-53	< LOD	0.03
2251	1/26/2010	3	CEILING	DRYWALL	WHITE		Q-53	< LOD	0.03
2252	1/26/2010	2	CEILING	DRYWALL	WHITE		Q-53	< LOD	0.03
2253	1/26/2010	1	CEILING	DRYWALL	WHITE		Q-53	< LOD	0.03
2254	1/26/2010	1	CLST SHELF	WOOD	VARNISH	E	Q-53	< LOD	0.03
2255	1/26/2010	3	CLST SHELF	WOOD	VARNISH	D	Q-53	< LOD	0.03
2256	1/26/2010	7	CLST SHELF	WOOD	VARNISH	B	Q-53	< LOD	0.03
2257	1/26/2010	8	CLST SHELF	WOOD	VARNISH	B	Q-53	< LOD	0.03
2258	1/26/2010	9	CLST SHELF	WOOD	VARNISH	B	Q-53	< LOD	0.07
2259	1/26/2010	9	CLST DOOR	WOOD	VARNISH	B	Q-53	< LOD	0.03
2260	1/26/2010	8	CLST DOOR	WOOD	VARNISH	B	Q-53	< LOD	0.03
2261	1/26/2010	7	CLST DOOR	WOOD	VARNISH	B	Q-53	< LOD	0.03
2262	1/26/2010	3	CLST DOOR	WOOD	VARNISH	D	Q-53	< LOD	0.03
2263	1/26/2010	1	CLST DOOR	WOOD	VARNISH	E	Q-53	< LOD	0.04
2264	1/26/2010	1	BASEBOARD	WOOD	VARNISH	E	Q-53	< LOD	0.03

Table 2
XRF Data

Sample #	Sample Date	Sample Location[1]	Component	Substrate	Color	Wall	Unit Number	XRF Reading (mg/cm2)	XRF Error (mg/cm2)
2265	1/26/2010	2	BASEBOARD	WOOD	VARNISH	B	Q-53	< LOD	0.03
2266	1/26/2010	6	BASEBOARD	WOOD	VARNISH	B	Q-53	< LOD	0.04
2267	1/26/2010	7	BASEBOARD	WOOD	VARNISH	B	Q-53	< LOD	0.03
2268	1/26/2010	8	BASEBOARD	WOOD	VARNISH	B	Q-53	< LOD	0.03
2269	1/26/2010	9	BASEBOARD	WOOD	VARNISH	B	Q-53	< LOD	0.03
2270	1/26/2010	4	CBNT FRONT	WOOD	VARNISH	B	Q-53	< LOD	0.03
2271	1/26/2010	3	CBNT FRONT	WOOD	VARNISH	B	Q-53	< LOD	0.03
2272	1/26/2010	2	DOOR	METAL	WHITE	B	Q-53	< LOD	0.12
2273	1/26/2010	2	DR. TRIM	WOOD	VARNISH	B	Q-53	< LOD	0.03
2274	1/26/2010	1	DR. TRIM	WOOD	VARNISH	A	Q-53	< LOD	0.03
2275	1/26/2010	1	DOOR	METAL	WHITE	A	Q-53	< LOD	0.11
2276	1/26/2010	1	DOOR	WOOD	VARNISH	B	Q-53	< LOD	0.03
2277	1/26/2010	1	DR. CASING LF	WOOD	VARNISH	C	Q-53	< LOD	0.03
2278	1/26/2010	1	DR. TRIM	WOOD	VARNISH	D	Q-53	< LOD	0.03
2279	1/26/2010	7	DR. TRIM	WOOD	VARNISH	A	Q-53	< LOD	0.03
2280	1/26/2010	7	DOOR	WOOD	VARNISH	B	Q-53	< LOD	0.03

Table 2
XRF Data

Sample #	Sample Date	Sample Location[1]	Component	Substrate	Color	Wall	Unit Number	XRF Reading (mg/cm2)	XRF Error (mg/cm2)
2281	1/26/2010	7	WNDW TRIM	WOOD	VARNISH	D	Q-53	< LOD	0.03
2282	1/26/2010	8	WNDW TRIM	WOOD	VARNISH	D	Q-53	< LOD	0.03
2283	1/26/2010	9	WNDW TRIM	WOOD	VARNISH	D	Q-53	< LOD	0.03
2284	1/26/2010	2	WNDW TRIM	WOOD	VARNISH	B	Q-53	< LOD	0.03
2285	1/26/2010	3	WNDW TRIM	WOOD	VARNISH	B	Q-53	< LOD	0.03
2286	1/26/2010	2	RADIATOR	METAL	GREY	B	Q-53	< LOD	0.03
2287	1/26/2010	1	RADIATOR	METAL	GREY	E	Q-53	< LOD	0.03
2288	1/26/2010	9	RADIATOR	METAL	GREY	D	Q-53	< LOD	0.03
2289	1/26/2010	8	RADIATOR	METAL	GREY	D	Q-53	< LOD	0.03
2290	1/26/2010	7	RADIATOR	METAL	GREY	D	Q-53	< LOD	0.03
2291	1/26/2010	PORCH REAR	DOOR	METAL	GREEN	D	Q-53	0.7	0.3
2310	4/26/2010	PORCH REAR	DOOR	METAL	GREEN	D	Q-53	1.1	0.1
2292	1/26/2010	PORCH REAR	DOOR	WOOD	GREY	C	Q-53	< LOD	0.03
2293	1/26/2010	PORCH REAR	PORCH SIDING	WOOD	GREY	C	Q-53	< LOD	0.03
2294	1/26/2010	PORCH REAR	PORCH SIDING	WOOD	GREY	D	Q-53	< LOD	0.03
2295	1/26/2010	PORCH REAR	PORCH SIDING	WOOD	GREY	A	Q-53	< LOD	0.03

Table 2
XRF Data

Sample #	Sample Date	Sample Location[1]	Component	Substrate	Color	Wall	Unit Number	XRF Reading (mg/cm2)	XRF Error (mg/cm2)
2296	1/26/2010	SHUTTER CAL						9.42	0
2297	1/26/2010	PORCH REAR	DR. TRIM	WOOD	WHITE	C	Q-53	< LOD	0.03
2298	1/26/2010	PORCH REAR	DR. TRIM	WOOD	WHITE	C	Q-53	< LOD	0.03
2299	1/26/2010	PORCH REAR	PORCH SUP COLUMN	WOOD	WHITE		Q-53	< LOD	0.03
2300	1/26/2010	PORCH REAR	PORCH CEILING	WOOD	GREY		Q-53	< LOD	0.03
2301	1/26/2010	SRM2573	CALIBRATE - FRONT					1.1	0.1

[1] – room numbers unless otherwise denoted
mg/cm^2 – denotes milligrams (of lead) per centimeter squared (of surface)
A Wall – primary wall for location identification. From A Wall move clockwise A, B, C…
<LOD – Less than the limit of detection for the XRF

FIGURES 1, 2, 3, 4 and 5

SUSPECT ACBM SAMPLE LOCATIONS

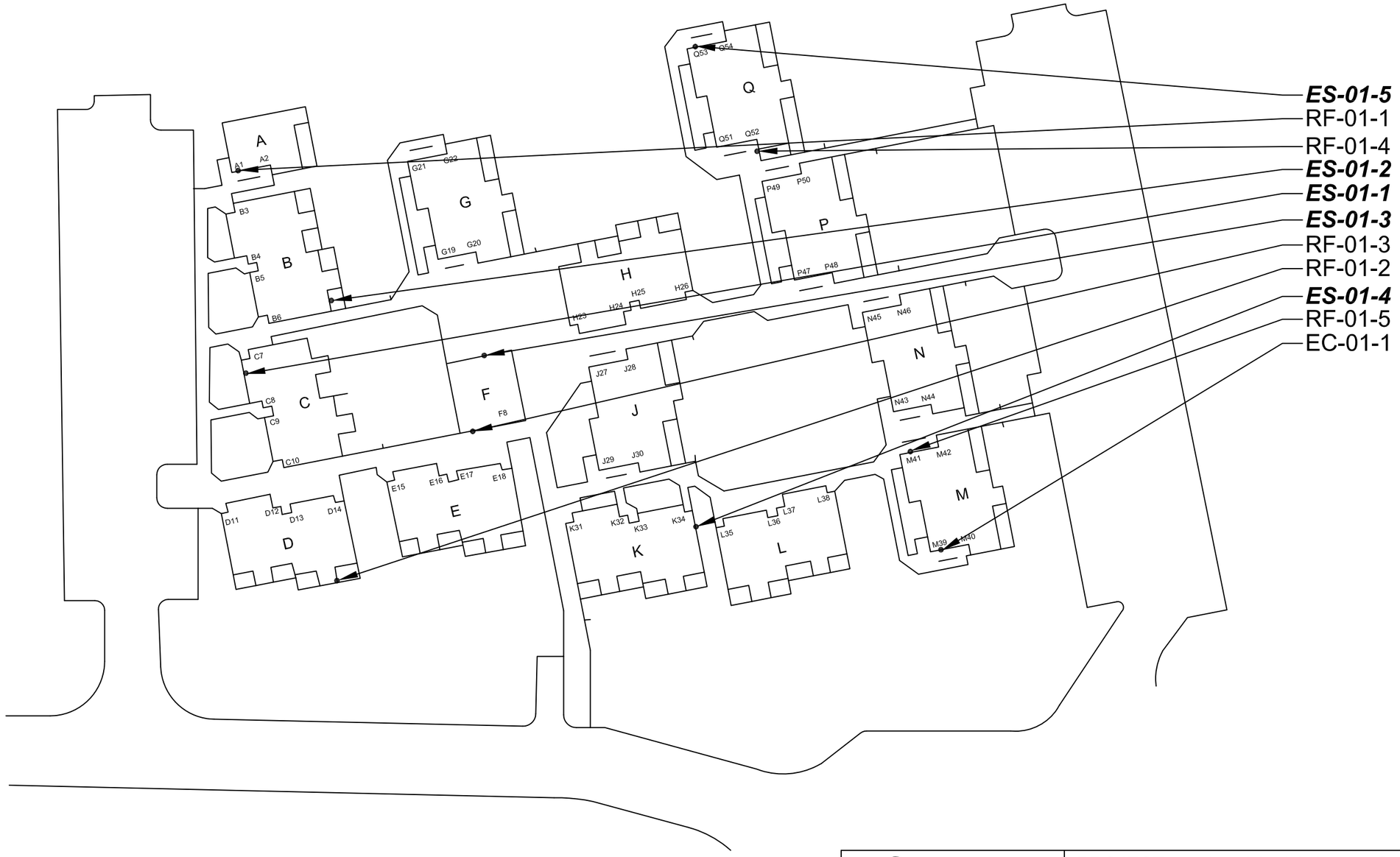

Legend

Non-Italicized Samples are Non Asbestos-Containing

Italicized Samples Are Asbestos-Containing

E3RA Inc.
9802 29th Ave. W.
Suite B102
Everett, WA 98204
425-356-3372
425-356-3374 fax
www.e3ra.com

PROJECT:	Lead And Asbestos Survey Columbia Village		
SHEET TITLE:	Asbestos Sample Locations Exterior		
DESIGNER:	CDK	JOB NO.	E09034
DRAWN BY:	CRL	SCALE:	NA
CHECKED BY:	DJH	FIGURE:	1
DATE:	Mar. 14, 2010	FILE:	Sample Loc.dwg

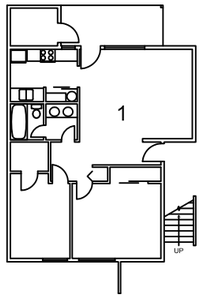

Building A (1st Flr.)

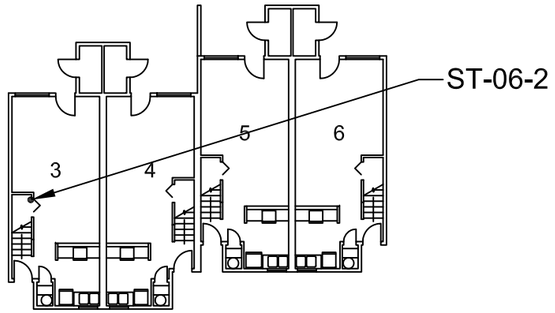

Building B (1st Flr.)

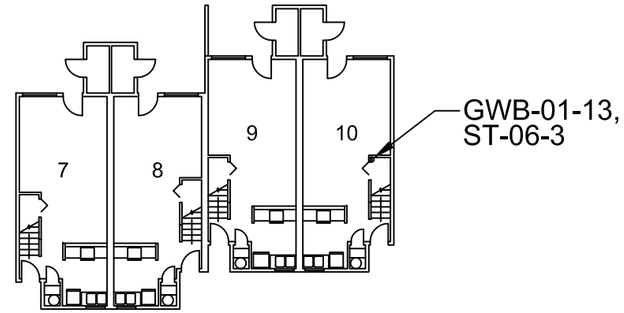

Building C (1st Flr.)

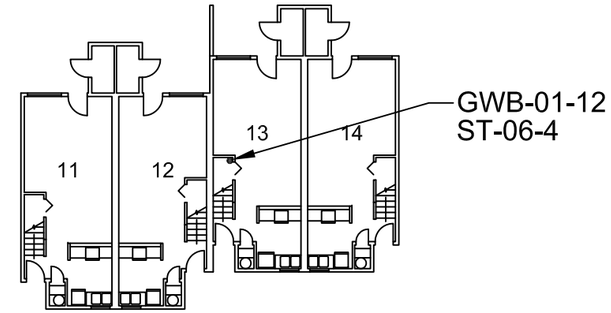

Building D (1st Flr.)

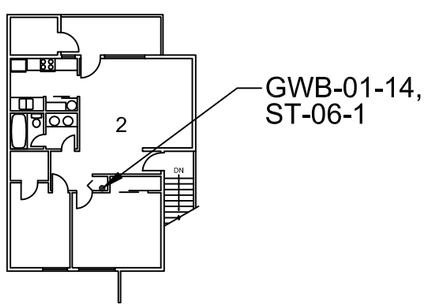

Building A (2nd Flr.)

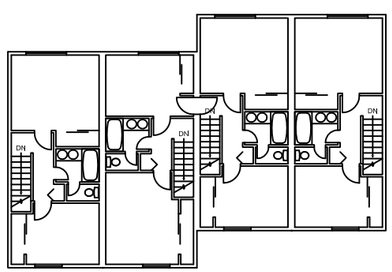

Building B (2nd Flr.)

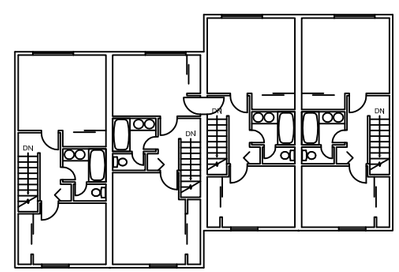

Building C (2nd Flr.)

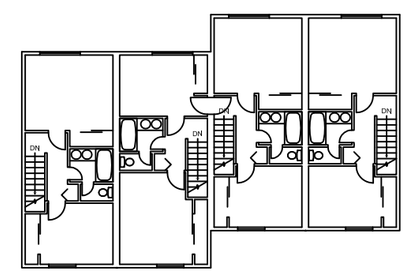

Building D (2nd Flr.)

Legend

Non-Italicized Samples are Non Asbestos-Containing
Italicized Samples Are Asbestos-Containing

E3RA Inc.
9802 29th Ave. W.
Suite B102
Everett, WA 98204
425-356-3372
425-356-3374 fax
www.e3ra.com

PROJECT:	Lead And Asbestos Survey Columbia Village		
SHEET TITLE:	Asbestos Sample Locations Buildings A, B, C, and D		
DESIGNER:	CDK	JOB NO.	E09034
DRAWN BY:	CRL	SCALE:	NA
CHECKED BY:	DJH	FIGURE:	2
DATE:	Mar. 14, 2010	FILE:	CJsampleloc.dwg

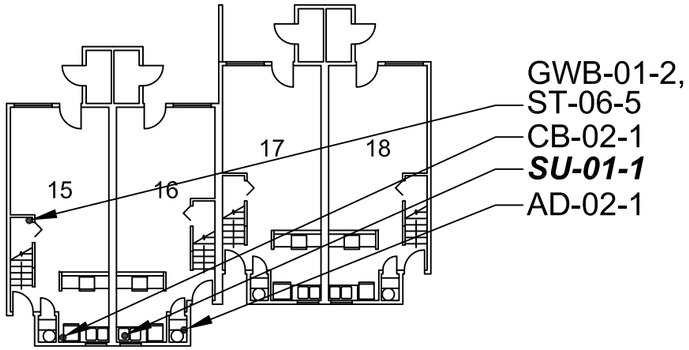

Building E (1st Flr.)

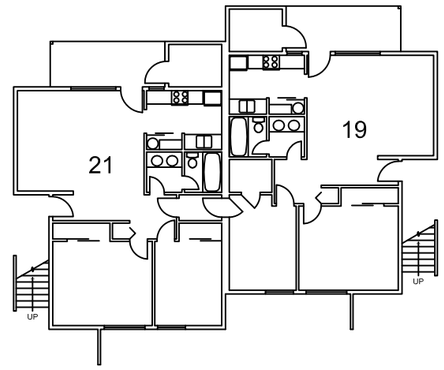

Building G (1st Flr.)

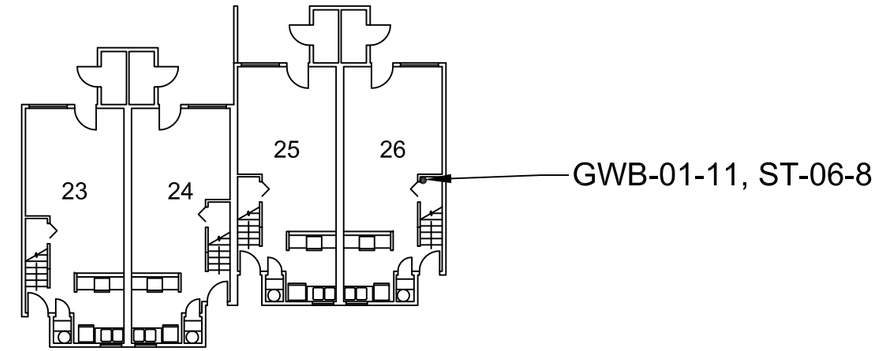

Building H (1st Flr.)

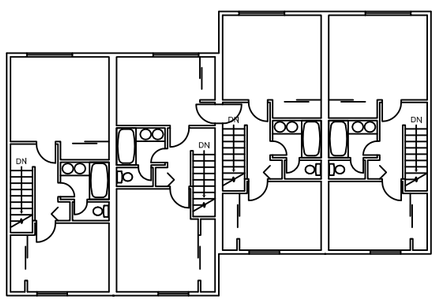

Building E (2nd Flr.)

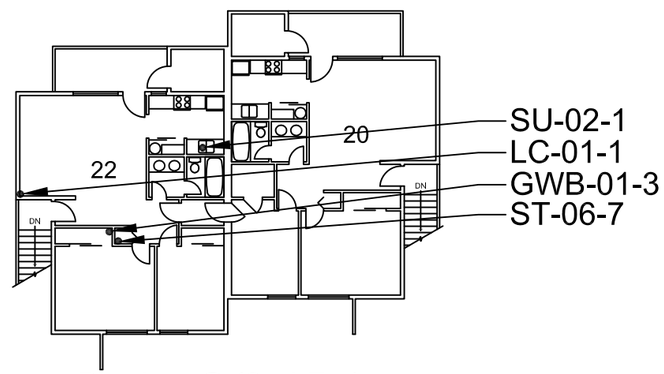

Building G (2nd Flr.)

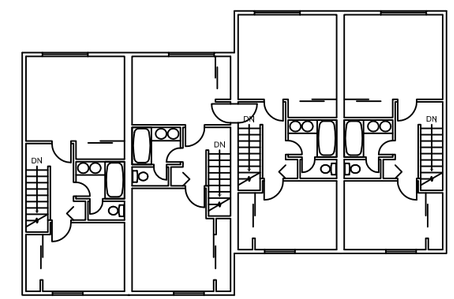

Building H (2nd Flr.)

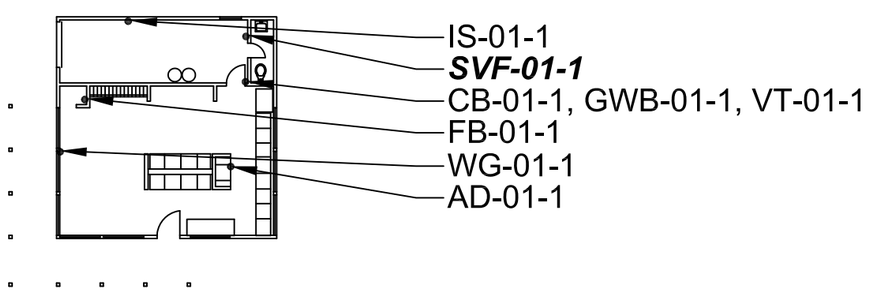

Building F

Legend

Non-Italicized Samples are Non Asbestos-Containing
Italicized Samples Are Asbestos-Containing

E3RA Inc.
9802 29th Ave. W.
Suite B102
Everett, WA 98204
425-356-3372
425-356-3374 fax
www.e3ra.com

PROJECT:	Lead And Asbestos Survey Columbia Village		
SHEET TITLE:	Asbestos Sample Locations Buildings E, F, G, and H		
DESIGNER:	CDK	JOB NO.	E09034
DRAWN BY:	CRL	SCALE:	NA
CHECKED BY:	DJH	FIGURE:	3
DATE:	Mar. 14, 2010	FILE:	CJsampleloc.dwg

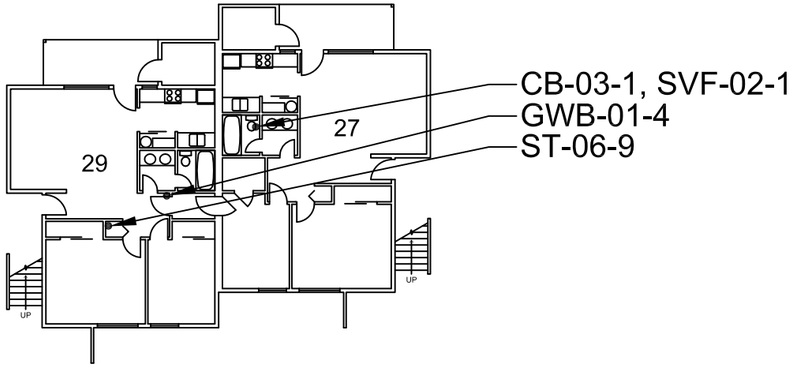

Building J (1st Flr.)

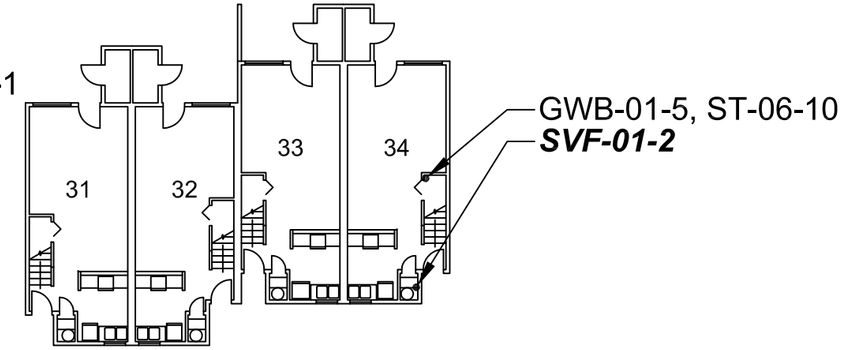

Building K (1st Flr.)

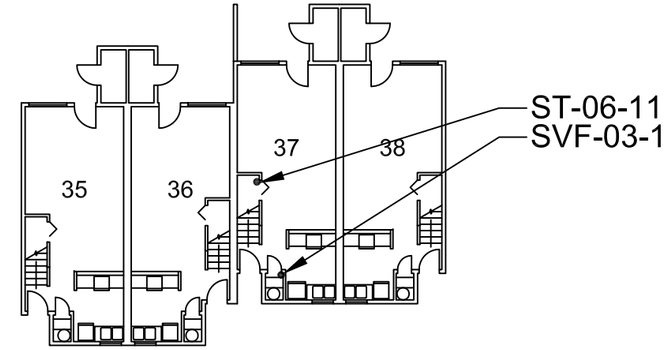

Building L (1st Flr.)

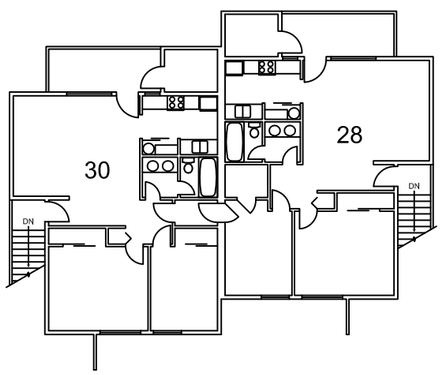

Building J (2nd Flr.)

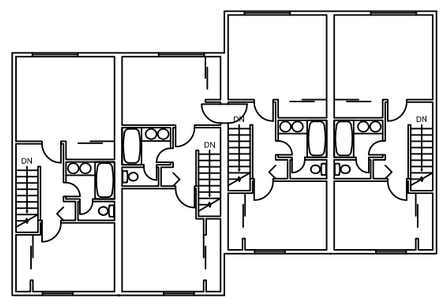

Building K (2nd Flr.)

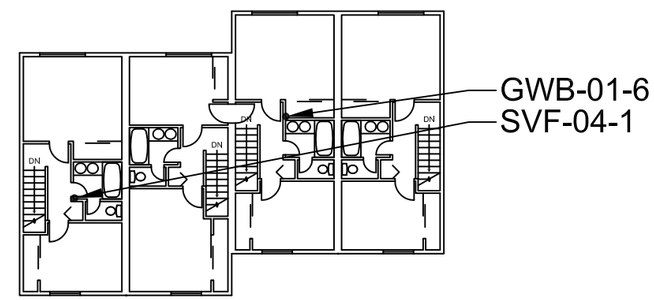

Building L (2nd Flr.)

Legend

Non-Italicized Samples are Non Asbestos-Containing

Italicized Samples Are Asbestos-Containing

E3RA Inc.
9802 29th Ave. W.
Suite B102
Everett, WA 98204
425-356-3372
425-356-3374 fax
www.e3ra.com

PROJECT:	Lead And Asbestos Survey Columbia Village		
SHEET TITLE:	Asbestos Sample Locations Buildings J, K, and L		
DESIGNER:	CDK	JOB NO.	E09034
DRAWN BY:	CRL	SCALE:	NA
CHECKED BY:	DJH	FIGURE:	4
DATE:	Mar. 14, 2010	FILE:	CJsampleloc.dwg

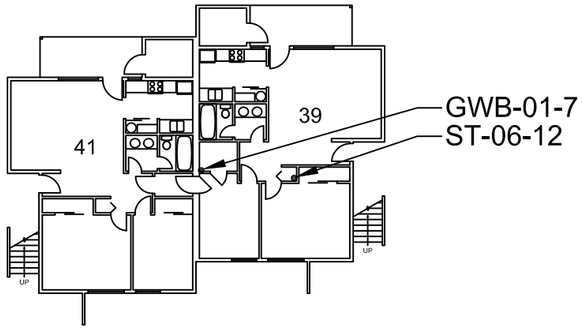

Building M (1st Flr.)

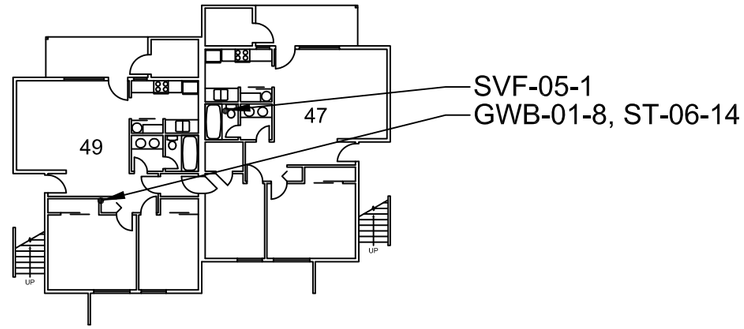

Building P (1st Flr.)

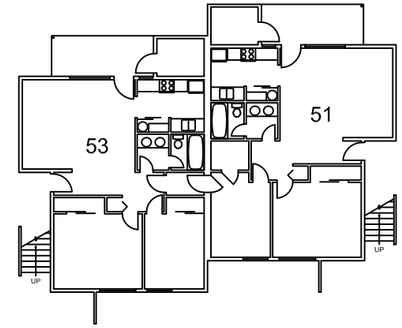

Building Q (1st Flr.)

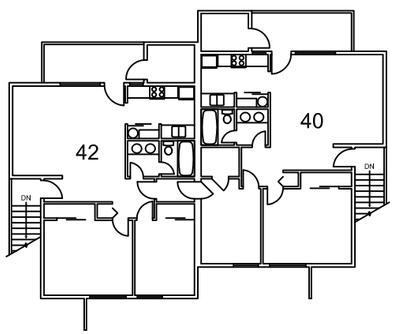

Building M (2nd Flr.)

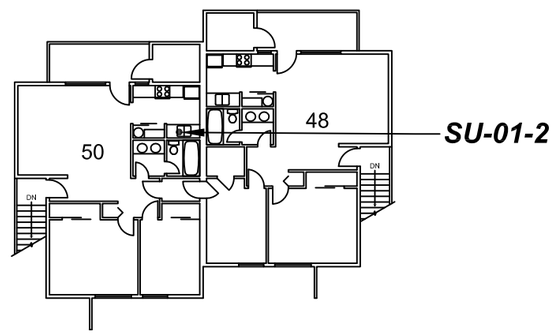

Building P (2nd Flr.)

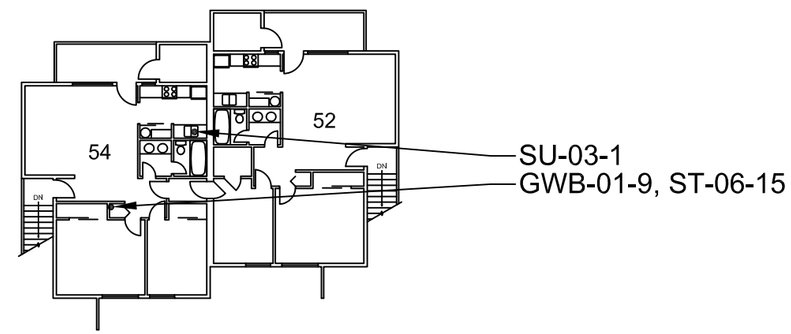

Building Q (2nd Flr.)

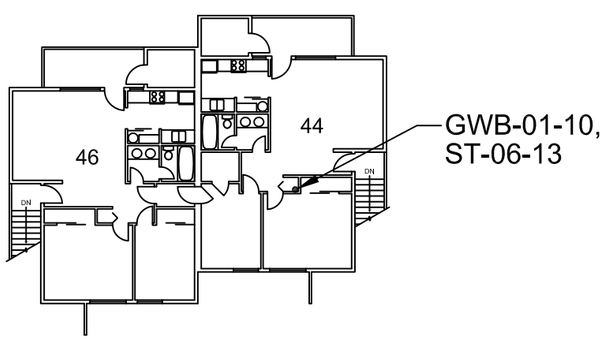

Building N (2nd Flr.)

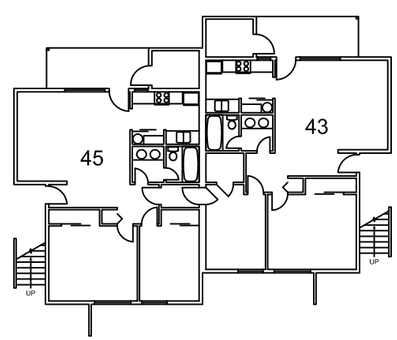

Building N (1st Flr.)

Legend

Non-Italicized Samples are Non Asbestos-Containing

Italicized Samples Are Asbestos-Containing

E3RA Inc.
9802 29th Ave. W.
Suite B102
Everett, WA 98204
425-356-3372
425-356-3374 fax
www.e3ra.com

PROJECT:	Lead And Asbestos Survey Columbia Village		
SHEET TITLE:	Asbestos Sample Locations Buildings M, N, P, and Q		
DESIGNER:	CDK	JOB NO.	E09034
DRAWN BY:	CRL	SCALE:	NA
CHECKED BY:	DJH	FIGURE:	5
DATE:	Mar. 14, 2010	FILE:	CJsampleloc.dwg

FIGURES L1, L2, L3, L4 and L5

LEAD WALL DESIGNATIONS

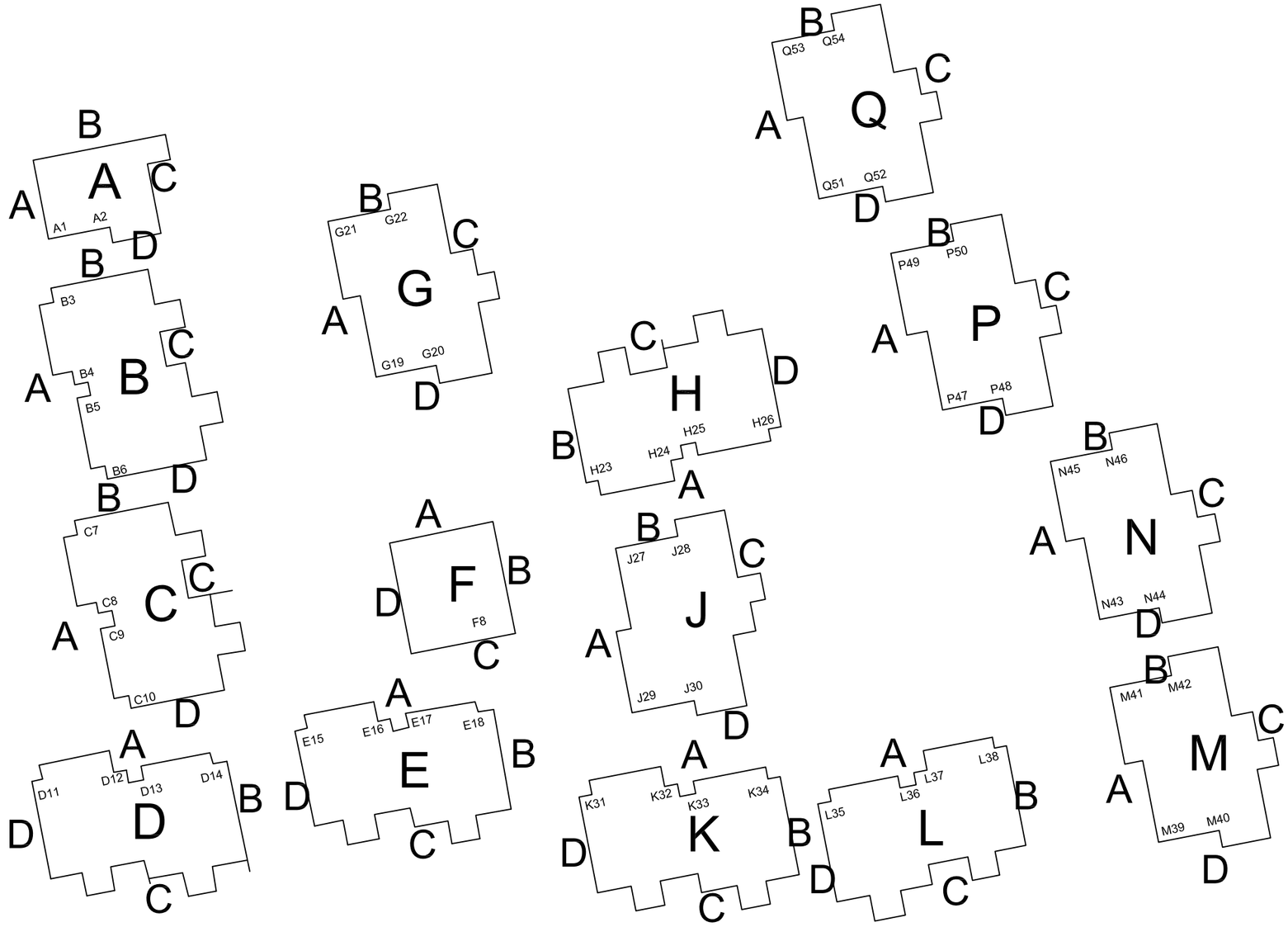

E3RA Inc.
9802 29th Ave. W.
Suite B102
Everett, WA 98204
425-356-3372
425-356-3374 fax
www.e3ra.com

PROJECT:	Lead And Asbestos Survey Columbia Village		
SHEET TITLE:	Lead Wall Designations Layout - Exteriors		
DESIGNER:	CDK	JOB NO.	E09034
DRAWN BY:	CRL	SCALE:	NA
CHECKED BY:	DJH	FIGURE:	L1
DATE:	Mar. 14, 2010	FILE:	Sample Loc.dwg

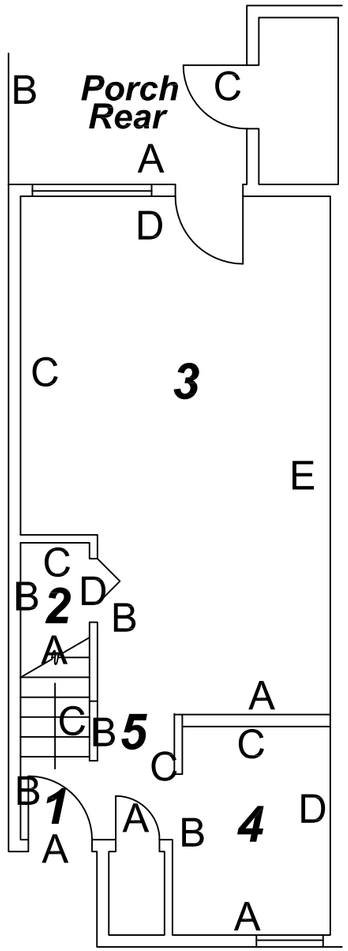

1st Flr.

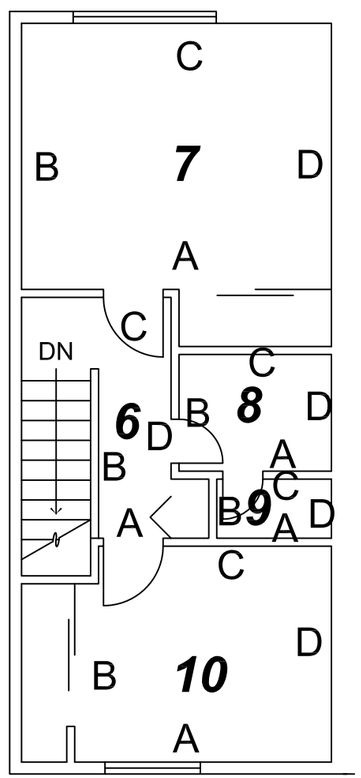

2nd Flr.

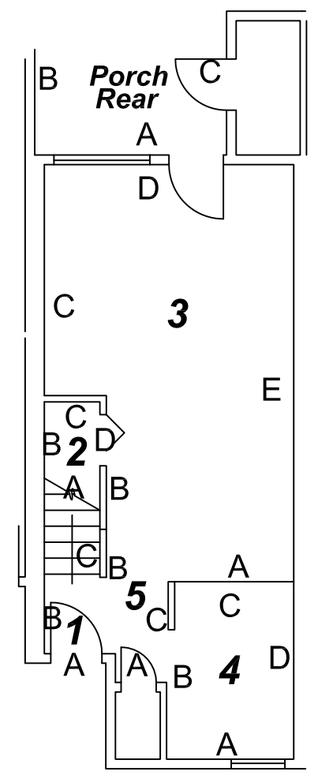

1st Flr.

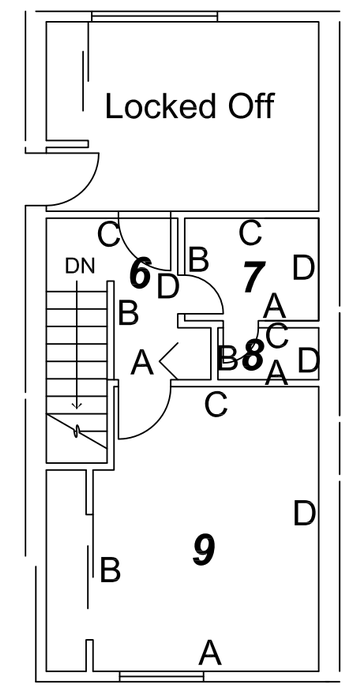

2nd Flr.

Unit K33

Units D11, E15, K31, L35

E3RA Inc.
9802 29th Ave. W.
Suite B102
Everett, WA 98204
425-356-3372
425-356-3374 fax
www.e3ra.com

PROJECT:	Lead And Asbestos Survey Columbia Village		
SHEET TITLE:	Lead Wall Designations Layouts 1 and 2		
DESIGNER:	CDK	JOB NO.	E09034
DRAWN BY:	CRL	SCALE:	NA
CHECKED BY:	DJH	FIGURE:	L2
DATE:	Mar. 14, 2010	FILE:	Sample Loc.dwg

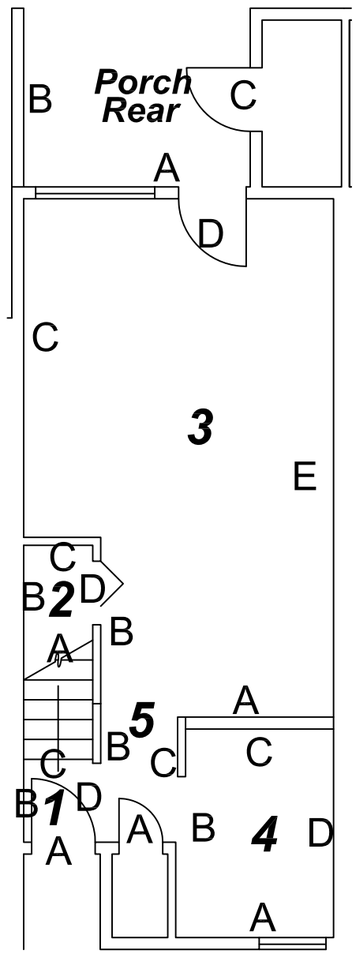

1st Flr.

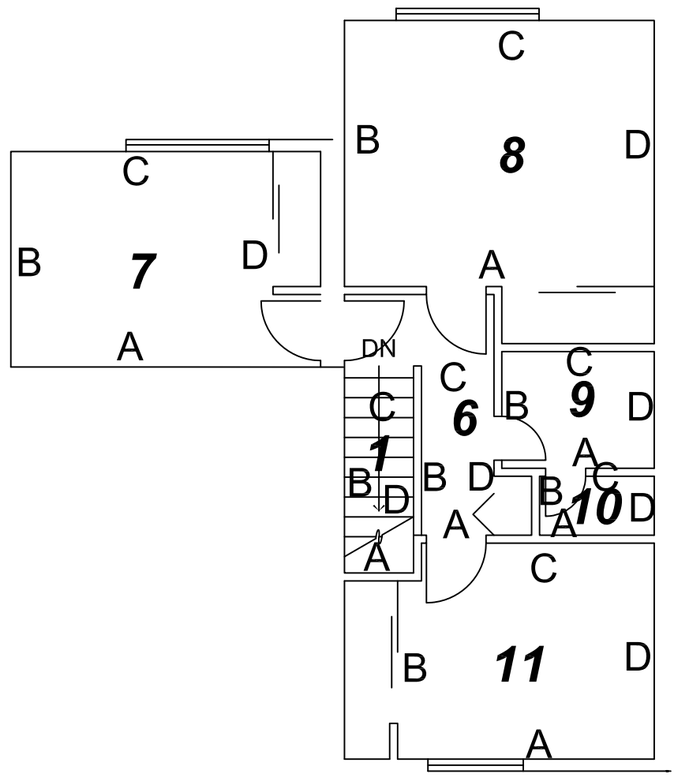

2nd Flr.

Units B5, L37

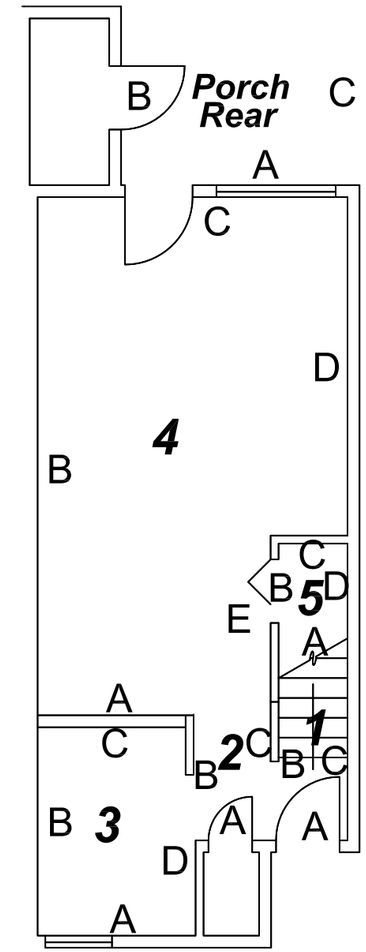

1st Flr.

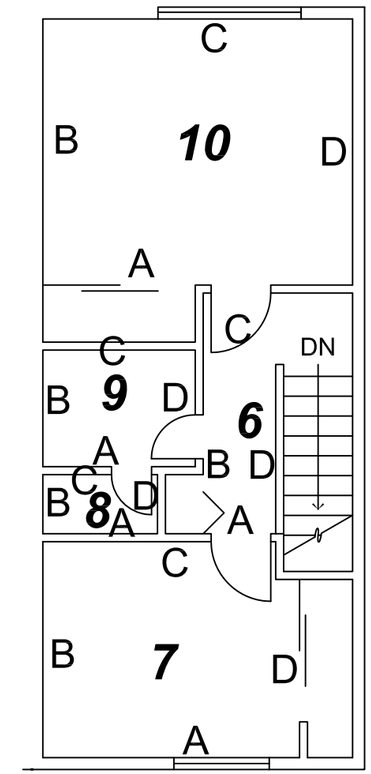

2nd Flr.

Units H24, K34, L38

E3RA Inc.
9802 29th Ave. W.
Suite B102
Everett, WA 98204
425-356-3372
425-356-3374 fax
www.e3ra.com

PROJECT:	Lead And Asbestos Survey Columbia Village		
SHEET TITLE:	Lead Wall Designations Layouts 3 and 4		
DESIGNER:	CDK	JOB NO.	E09034
DRAWN BY:	CRL	SCALE:	NA
CHECKED BY:	DJH	FIGURE:	L3
DATE:	Mar. 14, 2010	FILE:	Sample Loc.dwg

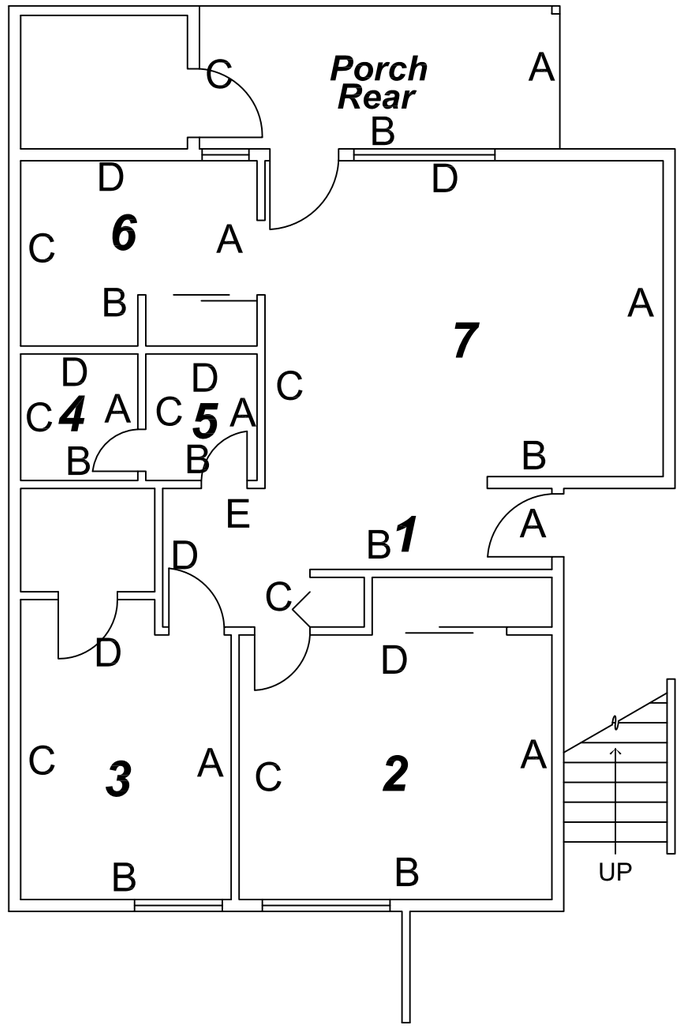

Units A2, G19, P47

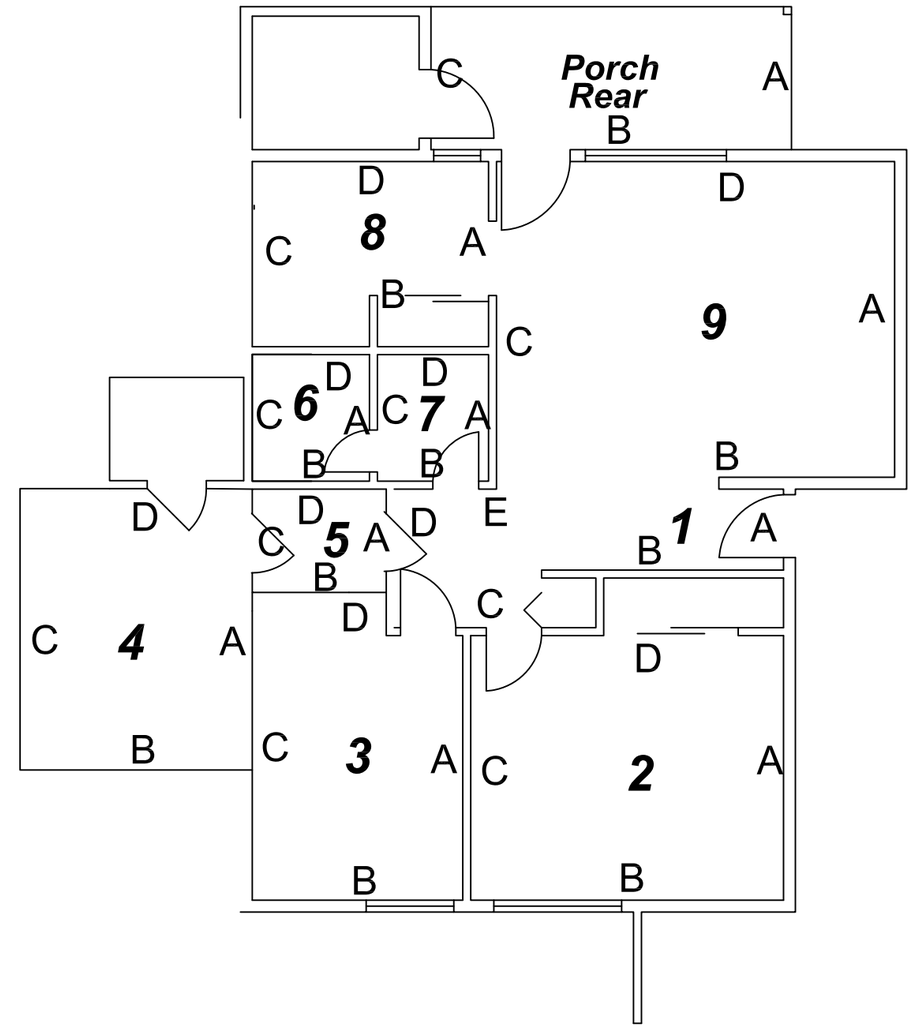

Unit J27

E3RA Inc.
9802 29th Ave. W.
Suite B102
Everett, WA 98204
425-356-3372
425-356-3374 fax
www.e3ra.com

PROJECT:	Lead And Asbestos Survey Columbia Village		
SHEET TITLE:	Lead Wall Designations Layouts 5 and 6		
DESIGNER:	CDK	JOB NO.	E09034
DRAWN BY:	CRL	SCALE:	NA
CHECKED BY:	DJH	FIGURE:	L4
DATE:	Mar. 14, 2010	FILE:	Sample Loc.dwg

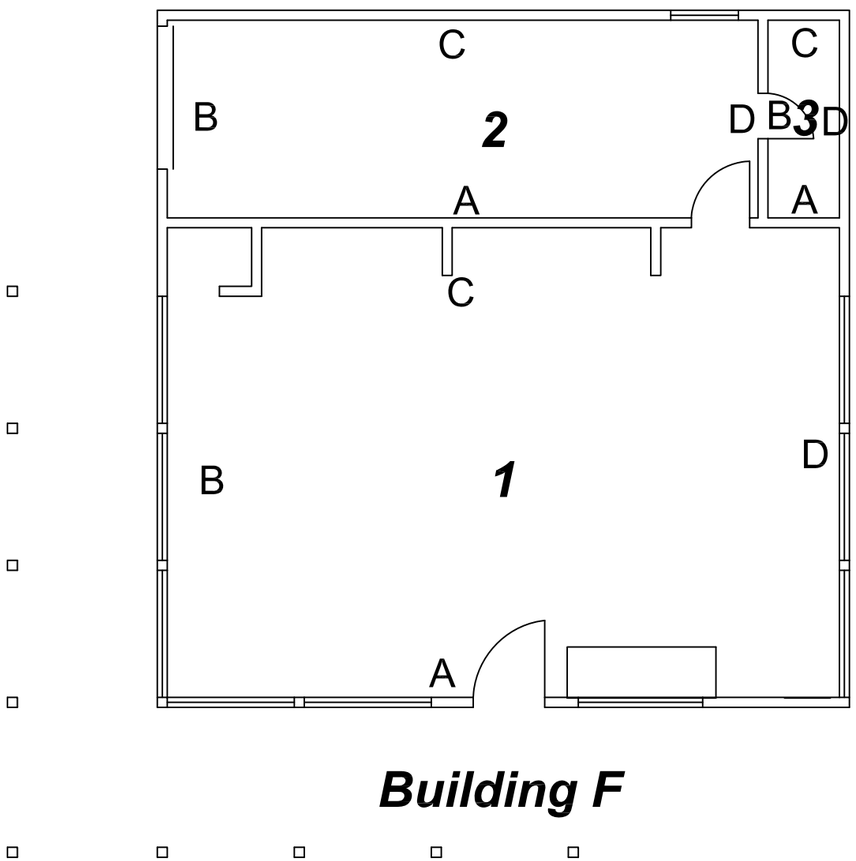

Building F

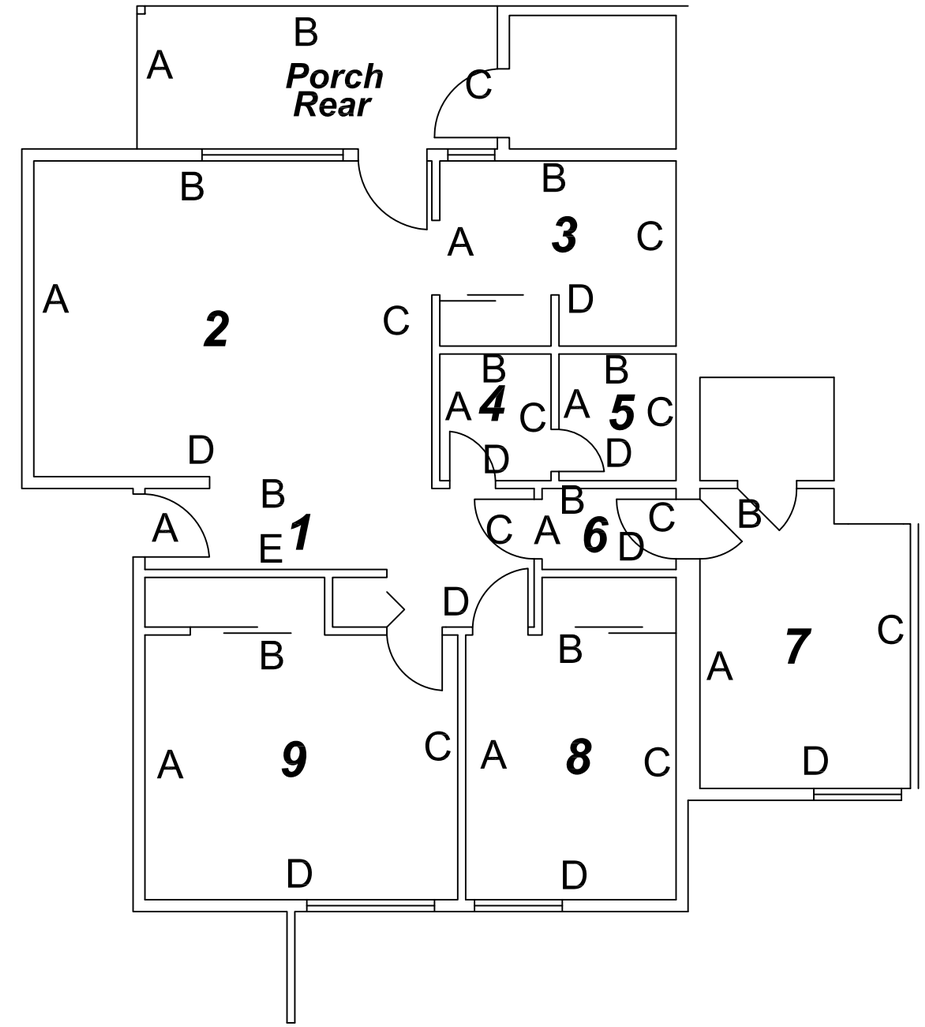

Units G21, G22, M41, M42, P49, P50, Q53, Q54

E3RA Inc.
9802 29th Ave. W.
Suite B102
Everett, WA 98204
425-356-3372
425-356-3374 fax
www.e3ra.com

PROJECT:	Lead And Asbestos Survey Columbia Village		
SHEET TITLE:	Lead Wall Designations Layouts 6 and 7		
DESIGNER:	CDK	JOB NO.	E09034
DRAWN BY:	CRL	SCALE:	NA
CHECKED BY:	DJH	FIGURE:	L5
DATE:	Mar. 14, 2010	FILE:	Sample Loc.dwg

APPENDIX A

SITE PHOTOGRAPHS

SITE PHOTOGRAPHS
Washington State University
Columbia Village Lead and Asbestos Survey

Sample No. SVF-01-1 and SVF-01-2, Sheet Vinyl Flooring (tan/gold square terrazzo pattern) with Mastic (yellow).

Sample No. WG-01-1, Window Putty (black).

Sample No. SU-01-1 and SU-01-2, Sink Undercoating (black).

Sample No. ES-01-1 to ES-01-5, Exterior Foundation Sealant (black).

APPENDIX B

CHAIN-OF-CUSTODY FORMS
AND
LABORATORY ANALYTICAL REPORTS

CA Labs
Dedicated to Quality

Crisp Analytical, L.L.C.
2081 Hutton, Suite 301
Carrollton, TX 75006
Phone 972-488-1414
Fax 972-488-8006

CA Labs, L.L.C.
12232 Industriplex, Suite 32
Baton Rouge, LA 70809
Phone 225-751-5632
Fax 225-751-5634

Materials Characterization - Bulk Asbestos Analysis

Laboratory Analysis Report - Polarized Light

E3RA
9802 29th Avenue, Suite B102
Everett, WA 98204

Attn: Chad Kean
Customer Project: Columbia / E09034
Reference #: CBR1001123 Date 1/29/2010

Analysis and Method

Summary of polarizing light microscopy (PLM / Stereomicroscopy bulk asbestos analysis) using the methods described in 40CFR Part 763 Appendix E to Subpart E (Interim and EPA 600 / R-93 / 116 (Improved). The sample is first viewed with the aid of stereomicroscopy. Numerous liquid slide preparations are created for analysis under the polarized microscope where identifications and quantifications are preformed. Calibrated liquid refractive oils are used as liquid mouting medium. These oils are used for identification (dispersion staining). A calibrated visual estimation is reported, should any asbestiform mineral be present. Other techniques such as acid washing are used in conjugation with refractive oils for detection of smaller quantities of asbestos. All asbestos percentages are based on calibrated visual estimation traceable to NIST standards for regulated of asbestos. Traceability to measurement and calibration is achieved by using known amounts and types of asbestos from standards where analyst and laboratory accuracy are measured. As little as 0.001% asbestos can be detected in favorable samples, while detection in unfavorable samples may approach the

Discussion

Vermiculite containing samples may have trace amounts of actinolite-tremolite, where not found be PLM should be analyzed using TEM methods and / or water separation techniques. Suspected actinolite/vermiculite presence will be indicated through the sample comment section of this report.

Fibrous talc containing samples may even contain a related asbestos fiber known as anthophyllite. Under certain conditions the same fiber may actually contain both talc and anthophyllite (a phenomenon called intergrowth). Again, TEM detection methods are recommended. CA Labs PLM report comments will denote suspected amounts of asbestiform anthophyllite with talc, where further analysis is recommended.

Some samples (floor tiles, surfacings, etc.) may contain fibers too small to be delectable by PLM analysis and should be analyzed by TEM bulk protocols.

A "trace asbestos" will be reported if the analyst observes far less than 1% asbestos. CA Labs defines "trace asbestos" as a few fibers detected by the analyst in several preparations and will indicate as such under these circumstances.

Quantification of <1% will actually be reported as <=1% (allowable variance close to 1% is high). Such results are ideal for point counting, and the technique is mandatory for friable samples (NESHAP, Nov. 1990 and clarification letter 8 May 1991) under 1% percent asbestos and the "trace asbestos". **In order to make all initial PLM reports issued from CA Labs NESHAP compliant, all <1% asbestos results (except floor tiles) will be point counted at no additional charge.**

Qualifications

CA Labs is accredited by NVLAP for selected test methods for bulk asbestos fiber analysis (PLM) and airborne fiber analysis (TEM). All analysts have a college degree in a natural science (geology, biology, or environmental science) or are recognized by a state professional board in one these disciplines .Extensive in-house training programs are used to augment education background of the analyst. The group leader of polarized light has received supplemental McCrone Research training for asbestos identification. This report is not covered by the scope of AIHA accreditation. Analysis performed at CA Labs, LLC 12232 Industriplex, Suite 32 Baton Rouge, LA 70809.

Baton Rouge NVLAP Lab Code 200772-0 TEM/PLM *TDH 30-0370*
LDEQ

CA Labs
Dedicated to Quality

Crisp Analytical, L.L.C.
2081 Hutton, Suite 301
Carrollton, TX 75006
Phone 972-488-1414
Fax 972-488-8006

CA Labs, L.L.C.
12232 Industriplex, Suite 32
Baton Rouge, LA 70809
Phone 225-751-5632
Fax 225-751-5634

Overview of Project Sample Material Containing Asbestos

Customer Project: Columbia / E09034 **CA Labs Project #:** CBR1001123

Sample #	Layer #	Analysts Physical Description of Subsample	Asbestos type / calibrated visual estimate percent	List of Affected Building Material Types
SVF-01-1	*1*	*tan linoleum*	***23% Chrysotile***	***tan linoleum***
SVF-01-1	*2*	*tan mastic*	***2% Chrysotile***	***tan mastic***
SVF-01-2	*1*	*tan linoleum*	***23% Chrysotile***	***black sealant***
SVF-01-2	*2*	*tan mastic*	***3% Chrysotile***	***black tar***
WG-01-1	*1*	*black sealant*	***3% Chrysotile***	***gray surfaced black sealant***
SU-10-1	*1*	*black tar*	***2% Chrysotile***	***white surfaced white compound***
SU-01-2	*1*	*black tar*	***3% Chrysotile***	***composite of layers 1, 2, and 3***
ES-01-1	*1*	*black sealant*	***2% Chrysotile***	***composite of layers 1 and 3***

Baton Rouge NVLAP Lab Code 200772-0 TEM/PLM *TDH 30-0370*
LDEQ

Glossary of abbreviations (non-asbestos fibers and non-fibrous minerals):

ca - carbonate
gypsum - gypsum
bi - binder
or - organic
ma - matrix
mi - mica
ve - vermiculite
ot - other
pe - perlite
qu - quartz
fg - fiberglass
mw - mineral wool
wo - wollastinite
ta - talc
sy - synthetic
ce - cellulose
br - brucite
ka - kaolin (clay)
pa - palygorskite (clay)

CA Labs
Dedicated to Quality

Crisp Analytical, L.L.C.
2081 Hutton, Suite 301
Carrollton, TX 75006
Phone 972-488-1414
Fax 972-488-8006

CA Labs, L.L.C.
12232 Industriplex, Suite 32
Baton Rouge, LA 70809
Phone 225-751-5632
Fax 225-751-5634

Overview of Project Sample Material Containing Asbestos

Customer Project: Columbia / E09034 **CA Labs Project #:** CBR1001123

Sample #	Layer #	Analysts Physical Description of Subsample	Asbestos type / calibrated visual estimate percent	List of Affected Building Material Types
ES-01-2	*1*	*gray surfaced black sealant*	***2% Chrysotile***	
ES-01-3	*1*	*black sealant*	***2% Chrysotile***	
ES-01-4	*1*	*black sealant*	***2% Chrysotile***	
ES-01-5	*1*	*black sealant*	***2% Chrysotile***	
GWB-01-2	*1*	*white surfaced white compound*	***2% Chrysotile***	
GWB-01-2	*2*	*white compound*	***2% Chrysotile***	
GWB-01-2	*4*	*composite of layers 1, 2, and 3*	***<1% Chrysotile***	
GWB-01-3	*1*	*white surfaced white compound*	***2% Chrysotile***	

Baton Rouge NVLAP Lab Code 200772-0 TEM/PLM *TDH 30-0370*
LDEQ

Glossary of abbreviations (non-asbestos fibers and non-fibrous minerals):

ca - carbonate
gypsum - gypsum
bi - binder
or - organic
ma - matrix
mi - mica
ve - vermiculite
ot - other
pe - perlite
qu - quartz
fg - fiberglass
mw - mineral wool
wo - wollastinite
ta - talc
sy - synthetic
ce - cellulose
br - brucite
ka - kaolin (clay)
pa - palygorskite (clay)

CA Labs
Dedicated to Quality

Crisp Analytical, L.L.C.
2081 Hutton, Suite 301
Carrollton, TX 75006
Phone 972-488-1414
Fax 972-488-8006

CA Labs, L.L.C.
12232 Industriplex, Suite 32
Baton Rouge, LA 70809
Phone 225-751-5632
Fax 225-751-5634

Overview of Project Sample Material Containing Asbestos

Customer Project: Columbia / E09034 **CA Labs Project #:** CBR1001123

Sample #	Layer #	Analysts Physical Description of Subsample	Asbestos type / calibrated visual estimate percent	List of Affected Building Material Types
GWB-01-3	*4*	*composite of layers 1 and 3*	***<1% Chrysotile***	
GWB-01-4	*1*	*white surfaced white compound*	***2% Chrysotile***	
GWB-01-4	*2*	*white compound*	***2% Chrysotile***	
GWB-01-4	*4*	*composite of layers 1, 2, and 3*	***<1% Chrysotile***	
GWB-01-5	*1*	*white surfaced white compound*	***<1% Chrysotile***	
GWB-01-5	*2*	*white compound*	***<1% Chrysotile***	
GWB-01-5	*4*	*composite of layers 1, 2, and 3*	***<1% Chrysotile***	
GWB-01-6	*1*	*white surfaced white compound*	***<1% Chrysotile***	

Baton Rouge NVLAP Lab Code 200772-0 TEM/PLM *TDH 30-0370*
LDEQ

Glossary of abbreviations (non-asbestos fibers and non-fibrous minerals):

ca - carbonate
gypsum - gypsum
bi - binder
or - organic
ma - matrix
mi - mica
ve - vermiculite
ot - other
pe - perlite
qu - quartz
fg - fiberglass
mw - mineral wool
wo - wollastinite
ta - talc
sy - synthetic
ce - cellulose
br - brucite
ka - kaolin (clay)
pa - palygorskite (clay)

CA Labs
Dedicated to Quality

Crisp Analytical, L.L.C.
2081 Hutton, Suite 301
Carrollton, TX 75006
Phone 972-488-1414
Fax 972-488-8006

CA Labs, L.L.C.
12232 Industriplex, Suite 32
Baton Rouge, LA 70809
Phone 225-751-5632
Fax 225-751-5634

Overview of Project Sample Material Containing Asbestos

Customer Project: Columbia / E09034 **CA Labs Project #:** CBR1001123

Sample #	Layer #	Analysts Physical Description of Subsample	Asbestos type / calibrated visual estimate percent	List of Affected Building Material Types
GWB-01-6	*2*	*white compound*	***<1% Chrysotile***	
GWB-01-6	*4*	*composite of layers 1, 2, and 3*	***<1% Chrysotile***	
GWB-01-7	*1*	*white surfaced white compound*	***<1% Chrysotile***	
GWB-01-7	*2*	*white compound*	***2% Chrysotile***	
GWB-01-7	*4*	*composite of layers 1, 2, and 3*	***<1% Chrysotile***	
GWB-01-8	*1*	*white surfaced white compound*	***<1% Chrysotile***	
GWB-01-8	*2*	*white compound*	***<1% Chrysotile***	
GWB-01-8	*4*	*composite of layers 1, 2, and 3*	***<1% Chrysotile***	

Baton Rouge NVLAP Lab Code 200772-0 TEM/PLM *TDH 30-0370*
LDEQ

Glossary of abbreviations (non-asbestos fibers and non-fibrous minerals):

ca - carbonate
gypsum - gypsum
bi - binder
or - organic
ma - matrix
mi - mica
ve - vermiculite
ot - other
pe - perlite
qu - quartz
fg - fiberglass
mw - mineral wool
wo - wollastinite
ta - talc
sy - synthetic
ce - cellulose
br - brucite
ka - kaolin (clay)
pa - palygorskite (clay)

CA Labs
Dedicated to Quality

Crisp Analytical, L.L.C.
2081 Hutton, Suite 301
Carrollton, TX 75006
Phone 972-488-1414
Fax 972-488-8006

CA Labs, L.L.C.
12232 Industriplex, Suite 32
Baton Rouge, LA 70809
Phone 225-751-5632
Fax 225-751-5634

Overview of Project Sample Material Containing Asbestos

Customer Project: Columbia / E09034 **CA Labs Project #:** CBR1001123

Sample #	Layer #	Analysts Physical Description of Subsample	Asbestos type / calibrated visual estimate percent	List of Affected Building Material Types
GWB-01-9	*1*	*white surfaced white compound*	***<1% Chrysotile***	
GWB-01-9	*2*	*white compound*	***<1% Chrysotile***	
GWB-01-9	*4*	*composite of layers 1, 2, and 3*	***<1% Chrysotile***	
GWB-01-10	*1*	*white surfaced white compound*	***<1% Chrysotile***	
GWB-01-10	*2*	*white compound*	***<1% Chrysotile***	
GWB-01-10	*4*	*composite of layers 1, 2, and 3*	***<1% Chrysotile***	
GWB-01-11	*1*	*white surfaced white compound*	***<1% Chrysotile***	
GWB-01-11	*2*	*white compound*	***<1% Chrysotile***	

Baton Rouge NVLAP Lab Code 200772-0 TEM/PLM *TDH 30-0370*
LDEQ

Glossary of abbreviations (non-asbestos fibers and non-fibrous minerals):

ca - carbonate
gypsum - gypsum
bi - binder
or - organic
ma - matrix
mi - mica
ve - vermiculite
ot - other
pe - perlite
qu - quartz
fg - fiberglass
mw - mineral wool
wo - wollastinite
ta - talc
sy - synthetic
ce - cellulose
br - brucite
ka - kaolin (clay)
pa - palygorskite (clay)

CA Labs
Dedicated to Quality

Crisp Analytical, L.L.C.
2081 Hutton, Suite 301
Carrollton, TX 75006
Phone 972-488-1414
Fax 972-488-8006

CA Labs, L.L.C.
12232 Industriplex, Suite 32
Baton Rouge, LA 70809
Phone 225-751-5632
Fax 225-751-5634

Overview of Project Sample Material Containing Asbestos

Customer Project: Columbia / E09034 **CA Labs Project #:** CBR1001123

Sample #	Layer #	Analysts Physical Description of Subsample	Asbestos type / calibrated visual estimate percent	List of Affected Building Material Types
GWB-01-11	*3*	*composite of layers 1 and 2*	***<1% Chrysotile***	
GWB-01-12	*1*	*white surfaced white compound*	***2% Chrysotile***	
GWB-01-12	*2*	*white compound*	***<1% Chrysotile***	
GWB-01-12	*4*	*composite of layers 1, 2, and 3*	***<1% Chrysotile***	
GWB-01-13	*1*	*white surfaced white compound*	***<1% Chrysotile***	
GWB-01-13	*2*	*white compound*	***<1% Chrysotile***	
GWB-01-13	*4*	*composite of layers 1, 2, and 3*	***<1% Chrysotile***	
GWB-01-14	*1*	*white surfaced white compound*	***<1% Chrysotile***	

Baton Rouge NVLAP Lab Code 200772-0 TEM/PLM *TDH 30-0370*
LDEQ

Glossary of abbreviations (non-asbestos fibers and non-fibrous minerals):

ca - carbonate
gypsum - gypsum
bi - binder
or - organic
ma - matrix
mi - mica
ve - vermiculite
ot - other
pe - perlite
qu - quartz
fg - fiberglass
mw - mineral wool
wo - wollastinite
ta - talc
sy - synthetic
ce - cellulose
br - brucite
ka - kaolin (clay)
pa - palygorskite (clay)

CA Labs
Dedicated to Quality

Crisp Analytical, L.L.C.
2081 Hutton, Suite 301
Carrollton, TX 75006
Phone 972-488-1414
Fax 972-488-8006

CA Labs, L.L.C.
12232 Industriplex, Suite 32
Baton Rouge, LA 70809
Phone 225-751-5632
Fax 225-751-5634

Overview of Project Sample Material Containing Asbestos

Customer Project: Columbia / E09034 **CA Labs Project #:** CBR1001123

Sample #	Layer #	Analysts Physical Description of Subsample	Asbestos type / calibrated visual estimate percent	List of Affected Building Material Types
GWB-01-14	*2*	*white compound*	***<1% Chrysotile***	

Baton Rouge NVLAP Lab Code 200772-0 TEM/PLM *TDH 30-0370*
LDEQ

Glossary of abbreviations (non-asbestos fibers and non-fibrous minerals):

ca - carbonate
gypsum - gypsum
bi - binder
or - organic
ma - matrix
mi - mica
ve - vermiculite
ot - other
pe - perlite
qu - quartz
fg - fiberglass
mw - mineral wool
wo - wollastinite
ta - talc
sy - synthetic
ce - cellulose
br - brucite
ka - kaolin (clay)
pa - palygorskite (clay)

CA Labs
Dedicated to Quality

Crisp Analytical, L.L.C.
2081 Hutton, Suite 301
Carrollton, TX 75006
Phone 972-488-1414
Fax 972-488-8006

CA Labs, L.L.C.
12232 Industriplex, Suite 32
Baton Rouge, LA 70809
Phone 225-751-5632
Fax 225-751-5634

Polarized Light Asbestiform Materials Characterization

Customer Info: **Attn:** Chad Kean
E3RA
9802 29th Avenue, Suite B102
Everett, WA 98204

Phone # 425-356-3372
Fax # 425-356-3374

Customer Project:
Columbia / E09034
Turnaround Time:
6-10 Day

CA Labs Project #:
CBR1001123

Date: 1/29/2010
Samples Received: 1/20/2010

Purchase Order #:

Sample #	Comment	Layer #	Analysts Physical Description of Subsample	Homogeneous (Y/N)	Asbestos type / calibrated visual estimate percent	Non-asbestos fiber type / percent	Non-fibrous type / percent
CB-01-1		*1*	*tan cove base*	*Y*	***None Detected***		100% qu, gy, bi
CB-01-1		*2*	*brown mastic*	*Y*	***None Detected***		100% qu, bi, gy
SVF-01-1		*1*	*tan linoleum*	*Y*	***23% Chrysotile***	2% ce	75% qu, gy, bi
SVF-01-1	***7***	*2*	*tan mastic*	*Y*	***2% Chrysotile***		98% qu, gy, bi
SVF-01-2		*1*	*tan linoleum*	*Y*	***23% Chrysotile***		77% qu, bi
SVF-01-2	***7***	*2*	*tan mastic*	*Y*	***3% Chrysotile***		97% qu, gy, bi
VT-01-1		*1*	*tan floor tile*	*Y*	***None Detected***		100% qu, ca

Baton Rouge NVLAP Lab Code 200772-0 TEM/PLM *TDH 30-0370*

LDEQ

Analysis Method: Interim (40CFR Part 763 Appendix E to Subpart E) / Improved (EPA-600 / R-93/116)
Preparation Method: HCL acid washing for carbonate based samples, chemical reduction for organically bound components, oil immersion for identification of asbestos types by dispersion attaining / becke line method.

ca - carbonate	mi - mica	fg - fiberglass	ce - cellulose
gypsum - gypsum	ve - vermiculite	mw - mineral wool	br - brucite
bi - binder	ot -other	wo - wollastinite	ka - kaolin (clay)
or - organic	pe - perlite	ta - talc	pa - palygorskite (clay)
ma - matrix	qu - quartz	sy - synthetic	

Approved Signatories:

Billie Poche
Analyst

Senior Analyst
Billie Poche

Laboratory Director
Chris Williams

1. Fire Damage significant fiber damage - reported percentages reflect unaltered fibers
2. Fire Damage no significant fiber damages effecting fibrous percentages
3. Actinolite in association with Vermiculite
4. Layer not analyzed - attached to previous positive layer and contamination is suspected
5. Not enough sample to analyze
6. Anthophyllite in association with Fibrous Talc
7. Contamination suspected from other building materials
8. Favorable scenario for water separation on vermiculite for possible analysis by another method
9. < 1% Result point counted positive
10. TEM analysis suggested

CA Labs
Dedicated to Quality

Crisp Analytical, L.L.C.
2081 Hutton, Suite 301
Carrollton, TX 75006
Phone 972-488-1414
Fax 972-488-8006

CA Labs, L.L.C.
12232 Industriplex, Suite 32
Baton Rouge, LA 70809
Phone 225-751-5632
Fax 225-751-5634

Polarized Light Asbestiform Materials Characterization

Customer Info: **Attn:** Chad Kean
E3RA
9802 29th Avenue, Suite B102
Everett, WA 98204

Phone # 425-356-3372
Fax # 425-356-3374

Customer Project:
Columbia / E09034
Turnaround Time:
6-10 Day

CA Labs Project #:
CBR1001123

Date: 1/29/2010
Samples Received: 1/20/2010

Purchase Order #:

Sample #	Comment	Layer #	Analysts Physical Description of Subsample	Homogeneous (Y/N)	Asbestos type / calibrated visual estimate percent	Non-asbestos fiber type / percent	Non-fibrous type / percent
VT-01-1		*2*	*tan mastic*	*Y*	***None Detected***		100% qu, gy, bi
CB-02-1		*1*	*gray cove base*	*Y*	***None Detected***		100% qu, gy, bi
CB-02-1		*2*	*brown mastic*	*Y*	***None Detected***		100% qu, gy, bi
LC-01-1		*1*	*white surfaced gray plaster*	*N*	***None Detected***		100% qu, ca
LC-01-1		*2*	*tan mastic*	*Y*	***None Detected***		100% qu, gy, bi
SVF-02-1		*1*	*off-white linoleum*	*Y*	***None Detected***	3% fg, 23% ce	74% qu, bi
SVF-02-1		*2*	*tan mastic*	*Y*	***None Detected***		100% qu, gy, bi

Baton Rouge NVLAP Lab Code 200772-0 TEM/PLM *TDH 30-0370*

LDEQ

Analysis Method: Interim (40CFR Part 763 Appendix E to Subpart E) / Improved (EPA-600 / R-93/116)
Preparation Method: HCL acid washing for carbonate based samples, chemical reduction for organically bound components, oil immersion for identification of asbestos types by dispersion attaining / becke line method.

ca - carbonate	mi - mica	fg - fiberglass	ce - cellulose
gypsum - gypsum	ve - vermiculite	mw - mineral wool	br - brucite
bi - binder	ot -other	wo - wollastinite	ka - kaolin (clay)
or - organic	pe - perlite	ta - talc	pa - palygorskite (clay)
ma - matrix	qu - quartz	sy - synthetic	

Approved Signatories:

Billie Poche
Analyst

Senior Analyst
Billie Poche

Laboratory Director
Chris Williams

1. Fire Damage significant fiber damage - reported percentages reflect unaltered fibers
2. Fire Damage no significant fiber damages effecting fibrous percentages
3. Actinolite in association with Vermiculite
4. Layer not analyzed - attached to previous positive layer and contamination is suspected
5. Not enough sample to analyze
6. Anthophyllite in association with Fibrous Talc
7. Contamination suspected from other building materials
8. Favorable scenario for water separation on vermiculite for possible analysis by another method
9. < 1% Result point counted positive
10. TEM analysis suggested

CA Labs
Dedicated to Quality

Crisp Analytical, L.L.C.
2081 Hutton, Suite 301
Carrollton, TX 75006
Phone 972-488-1414
Fax 972-488-8006

CA Labs, L.L.C.
12232 Industriplex, Suite 32
Baton Rouge, LA 70809
Phone 225-751-5632
Fax 225-751-5634

Polarized Light Asbestiform Materials Characterization

Customer Info: **Attn:** Chad Kean
E3RA
9802 29th Avenue, Suite B102
Everett, WA 98204

Phone # 425-356-3372
Fax # 425-356-3374

Customer Project:
Columbia / E09034
Turnaround Time:
6-10 Day

CA Labs Project #:
CBR1001123

Date: 1/29/2010
Samples Received: 1/20/2010

Purchase Order #:

Sample #	Comment	Layer #	Analysts Physical Description of Subsample	Homogeneous (Y/N)	Asbestos type / calibrated visual estimate percent	Non-asbestos fiber type / percent	Non-fibrous type / percent
CB-03-1		*1*	*black cove base*	*Y*	***None Detected***		100% qu, gy, bi
CB-03-1		*2*	*beige mastic*	*Y*	***None Detected***		100% qu, gy, bi
SVF-03-1		*1*	*off-white linoleum*	*Y*	***None Detected***	2% fg, 22% ce	76% qu, bi
SVF-03-1		*2*	*tan mastic*	*Y*	***None Detected***		100% qu, gy, bi
SVF-04-1		*1*	*gray linoleum*	*Y*	***None Detected***	4% fg, 18% ce	78% qu, bi
SVF-04-1		*2*	*tan mastic*	*Y*	***None Detected***		100% qu, bi
SVF-05-1		*1*	*off-white linoleum*	*Y*	***None Detected***	2% fg, 20% ce	78% qu, bi

Baton Rouge NVLAP Lab Code 200772-0 TEM/PLM *TDH 30-0370*

LDEQ

Analysis Method: Interim (40CFR Part 763 Appendix E to Subpart E) / Improved (EPA-600 / R-93/116)
Preparation Method: HCL acid washing for carbonate based samples, chemical reduction for organically bound components, oil immersion for identification of asbestos types by dispersion attaining / becke line method.

ca - carbonate	mi - mica	fg - fiberglass	ce - cellulose
gypsum - gypsum	ve - vermiculite	mw - mineral wool	br - brucite
bi - binder	ot -other	wo - wollastinite	ka - kaolin (clay)
or - organic	pe - perlite	ta - talc	pa - palygorskite (clay)
ma - matrix	qu - quartz	sy - synthetic	

Approved Signatories:

Billie Poche
Analyst

Senior Analyst
Billie Poche

Laboratory Director
Chris Williams

1. Fire Damage significant fiber damage - reported percentages reflect unaltered fibers
2. Fire Damage no significant fiber damages effecting fibrous percentages
3. Actinolite in association with Vermiculite
4. Layer not analyzed - attached to previous positive layer and contamination is suspected
5. Not enough sample to analyze
6. Anthophyllite in association with Fibrous Talc
7. Contamination suspected from other building materials
8. Favorable scenario for water separation on vermiculite for possible analysis by another method
9. < 1% Result point counted positive
10. TEM analysis suggested

CA Labs
Dedicated to Quality

Crisp Analytical, L.L.C.
2081 Hutton, Suite 301
Carrollton, TX 75006
Phone 972-488-1414
Fax 972-488-8006

CA Labs, L.L.C.
12232 Industriplex, Suite 32
Baton Rouge, LA 70809
Phone 225-751-5632
Fax 225-751-5634

Polarized Light Asbestiform Materials Characterization

Customer Info: **Attn:** Chad Kean
E3RA
9802 29th Avenue, Suite B102
Everett, WA 98204

Phone # 425-356-3372
Fax # 425-356-3374

Customer Project:
Columbia / E09034
Turnaround Time:
6-10 Day

CA Labs Project #:
CBR1001123

Date: 1/29/2010
Samples Received: 1/20/2010

Purchase Order #:

Sample #	Comment	Layer #	Analysts Physical Description of Subsample	Homogeneous (Y/N)	Asbestos type / calibrated visual estimate percent	Non-asbestos fiber type / percent	Non-fibrous type / percent
SVF-05-1		*2*	*tan mastic*	*Y*	***None Detected***		100% qu, gy, bi
RF-01-1		*1*	*black shingle*	*Y*	***None Detected***	15% fg	85% qu, bi
RF-01-1		*2*	*black tar paper*	*Y*	***None Detected***	88% ce	12% qu, bi
RF-01-1		*3*	*black mastic*	*Y*	***None Detected***		100% qu, gy, bi
RF-01-2		*1*	*black shingle*	*Y*	***None Detected***	16% fg	84% qu, bi
RF-01-2		*2*	*black tar paper*	*Y*	***None Detected***	88% ce	12% qu, bi
RF-01-2		*3*	*black mastic*	*Y*	***None Detected***		100% qu, gy, bi

Baton Rouge NVLAP Lab Code 200772-0 TEM/PLM *TDH 30-0370*

LDEQ

Analysis Method: Interim (40CFR Part 763 Appendix E to Subpart E) / Improved (EPA-600 / R-93/116)
Preparation Method: HCL acid washing for carbonate based samples, chemical reduction for organically bound components, oil immersion for identification of asbestos types by dispersion attaining / becke line method.

ca - carbonate	mi - mica	fg - fiberglass	ce - cellulose
gypsum - gypsum	ve - vermiculite	mw - mineral wool	br - brucite
bi - binder	ot -other	wo - wollastinite	ka - kaolin (clay)
or - organic	pe - perlite	ta - talc	pa - palygorskite (clay)
ma - matrix	qu - quartz	sy - synthetic	

Approved Signatories:

Billie Poche
Analyst

Senior Analyst
Billie Poche

Laboratory Director
Chris Williams

1. Fire Damage significant fiber damage - reported percentages reflect unaltered fibers
2. Fire Damage no significant fiber damages effecting fibrous percentages
3. Actinolite in association with Vermiculite
4. Layer not analyzed - attached to previous positive layer and contamination is suspected
5. Not enough sample to analyze
6. Anthophyllite in association with Fibrous Talc
7. Contamination suspected from other building materials
8. Favorable scenario for water separation on vermiculite for possible analysis by another method
9. < 1% Result point counted positive
10. TEM analysis suggested

CA Labs
Dedicated to Quality

Crisp Analytical, L.L.C.
2081 Hutton, Suite 301
Carrollton, TX 75006
Phone 972-488-1414
Fax 972-488-8006

CA Labs, L.L.C.
12232 Industriplex, Suite 32
Baton Rouge, LA 70809
Phone 225-751-5632
Fax 225-751-5634

Polarized Light Asbestiform Materials Characterization

Customer Info: **Attn:** Chad Kean
E3RA
9802 29th Avenue, Suite B102
Everett, WA 98204

Phone # 425-356-3372
Fax # 425-356-3374

Customer Project:
Columbia / E09034
Turnaround Time:
6-10 Day

CA Labs Project #:
CBR1001123

Date: 1/29/2010
Samples Received: 1/20/2010

Purchase Order #:

Sample #	Comment	Layer #	Analysts Physical Description of Subsample	Homogeneous (Y/N)	Asbestos type / calibrated visual estimate percent	Non-asbestos fiber type / percent	Non-fibrous type / percent
RF-01-3		*1*	*black shingle*	*Y*	***None Detected***	17% fg	83% qu, bi
RF-01-3		*2*	*black tar paper*	*Y*	***None Detected***	90% ce	10% bi
RF-01-3		*3*	*black mastic*	*Y*	***None Detected***		100% qu, gy, bi
RF-01-4		*1*	*black shingle*	*Y*	***None Detected***	14% fg	86% qu, bi
RF-01-4		*2*	*black tar paper*	*Y*	***None Detected***	88% ce	12% qu, bi
RF-01-4		*3*	*black mastic*	*Y*	***None Detected***		100% qu, gy, bi
RF-01-5		*1*	*black shingle*	*Y*	***None Detected***	15% fg	85% qu, bi

Baton Rouge NVLAP Lab Code 200772-0 TEM/PLM *TDH 30-0370*

LDEQ

Analysis Method: Interim (40CFR Part 763 Appendix E to Subpart E) / Improved (EPA-600 / R-93/116)
Preparation Method: HCL acid washing for carbonate based samples, chemical reduction for organically bound components, oil immersion for identification of asbestos types by dispersion attaining / becke line method.

ca - carbonate	mi - mica	fg - fiberglass	ce - cellulose
gypsum - gypsum	ve - vermiculite	mw - mineral wool	br - brucite
bi - binder	ot -other	wo - wollastinite	ka - kaolin (clay)
or - organic	pe - perlite	ta - talc	pa - palygorskite (clay)
ma - matrix	qu - quartz	sy - synthetic	

Approved Signatories:

Billie Poche
Analyst

Senior Analyst
Billie Poche

Laboratory Director
Chris Williams

1. Fire Damage significant fiber damage - reported percentages reflect unaltered fibers
2. Fire Damage no significant fiber damages effecting fibrous percentages
3. Actinolite in association with Vermiculite
4. Layer not analyzed - attached to previous positive layer and contamination is suspected
5. Not enough sample to analyze
6. Anthophyllite in association with Fibrous Talc
7. Contamination suspected from other building materials
8. Favorable scenario for water separation on vermiculite for possible analysis by another method
9. < 1% Result point counted positive
10. TEM analysis suggested

CA Labs
Dedicated to Quality

Crisp Analytical, L.L.C.
2081 Hutton, Suite 301
Carrollton, TX 75006
Phone 972-488-1414
Fax 972-488-8006

CA Labs, L.L.C.
12232 Industriplex, Suite 32
Baton Rouge, LA 70809
Phone 225-751-5632
Fax 225-751-5634

Polarized Light Asbestiform Materials Characterization

Customer Info: **Attn:** Chad Kean
E3RA
9802 29th Avenue, Suite B102
Everett, WA 98204

Phone # 425-356-3372
Fax # 425-356-3374

Customer Project:
Columbia / E09034
Turnaround Time:
6-10 Day

CA Labs Project #:
CBR1001123

Date: 1/29/2010
Samples Received: 1/20/2010

Purchase Order #:

Sample #	Comment	Layer #	Analysts Physical Description of Subsample	Homogeneous (Y/N)	Asbestos type / calibrated visual estimate percent	Non-asbestos fiber type / percent	Non-fibrous type / percent
RF-01-5		*2*	*black tar paper*	*Y*	***None Detected***	88% ce	12% qu, bi
RF-01-5		*3*	*black mastic*	*Y*	***None Detected***		100% qu, gy, bi
EC-01-1		*1*	*gray surfaced gray sealant*	*N*	***None Detected***	3% ce	97% qu, gy, bi
AD-01-1		*1*	*purple surfaced brown paneling*	*Y*	***None Detected***	80% ce	20% bi
WG-01-1		*1*	*black sealant*	*Y*	***3% Chrysotile***	2% ce	95% qu, gy, bi
FB-01-1		*1*	*white surfaced tan fiber board*	*N*	***None Detected***	90% ce	10% bi
IS-01-1		*1*	*black tar paper*	*Y*	***None Detected***	90% ce	10% qu, bi

Baton Rouge NVLAP Lab Code 200772-0 TEM/PLM *TDH 30-0370*

LDEQ

Analysis Method: Interim (40CFR Part 763 Appendix E to Subpart E) / Improved (EPA-600 / R-93/116)
Preparation Method: HCL acid washing for carbonate based samples, chemical reduction for organically bound components, oil immersion for identification of asbestos types by dispersion attaining / becke line method.

ca - carbonate	mi - mica	fg - fiberglass	ce - cellulose
gypsum - gypsum	ve - vermiculite	mw - mineral wool	br - brucite
bi - binder	ot -other	wo - wollastinite	ka - kaolin (clay)
or - organic	pe - perlite	ta - talc	pa - palygorskite (clay)
ma - matrix	qu - quartz	sy - synthetic	

Approved Signatories:

Billie Poche
Analyst

Senior Analyst
Billie Poche

Laboratory Director
Chris Williams

1. Fire Damage significant fiber damage - reported percentages reflect unaltered fibers
2. Fire Damage no significant fiber damages effecting fibrous percentages
3. Actinolite in association with Vermiculite
4. Layer not analyzed - attached to previous positive layer and contamination is suspected
5. Not enough sample to analyze
6. Anthophyllite in association with Fibrous Talc
7. Contamination suspected from other building materials
8. Favorable scenario for water separation on vermiculite for possible analysis by another method
9. < 1% Result point counted positive
10. TEM analysis suggested

CA Labs
Dedicated to Quality

Crisp Analytical, L.L.C.
2081 Hutton, Suite 301
Carrollton, TX 75006
Phone 972-488-1414
Fax 972-488-8006

CA Labs, L.L.C.
12232 Industriplex, Suite 32
Baton Rouge, LA 70809
Phone 225-751-5632
Fax 225-751-5634

Polarized Light Asbestiform Materials Characterization

Customer Info: **Attn:** Chad Kean
E3RA
9802 29th Avenue, Suite B102
Everett, WA 98204

Phone # 425-356-3372
Fax # 425-356-3374

Customer Project:
Columbia / E09034
Turnaround Time:
6-10 Day

CA Labs Project #:
CBR1001123

Date: 1/29/2010
Samples Received: 1/20/2010

Purchase Order #:

Sample #	Comment	Layer #	Analysts Physical Description of Subsample	Homogeneous (Y/N)	Asbestos type / calibrated visual estimate percent	Non-asbestos fiber type / percent	Non-fibrous type / percent
IS-01-1		*2*	*gray insulation*	*Y*	***None Detected***	100% fg	
SU-10-1		*1*	*black tar*	*Y*	***2% Chrysotile***		98% qu, bi
SU-01-2		*1*	*black tar*	*Y*	***3% Chrysotile***		97% qu, bi
AD-02-1		*1*	*tan mastic*	*Y*	***None Detected***	2% ce	98% qu, gy, bi
SU-02-1		*1*	*off-white sealant*	*Y*	***None Detected***		100% qu, bi
SU-03-1		*1*	*black tar*	*Y*	***None Detected***	2% ce	98% qu, bi
SU-03-1		*2*	*black mastic*	*Y*	***None Detected***		100% qu, gy, bi

Baton Rouge NVLAP Lab Code 200772-0 TEM/PLM *TDH 30-0370*

LDEQ

Analysis Method: Interim (40CFR Part 763 Appendix E to Subpart E) / Improved (EPA-600 / R-93/116)
Preparation Method: HCL acid washing for carbonate based samples, chemical reduction for organically bound components, oil immersion for identification of asbestos types by dispersion attaining / becke line method.

ca - carbonate	mi - mica	fg - fiberglass	ce - cellulose
gypsum - gypsum	ve - vermiculite	mw - mineral wool	br - brucite
bi - binder	ot -other	wo - wollastinite	ka - kaolin (clay)
or - organic	pe - perlite	ta - talc	pa - palygorskite (clay)
ma - matrix	qu - quartz	sy - synthetic	

Approved Signatories:

Billie Poche
Analyst

Senior Analyst
Billie Poche

Laboratory Director
Chris Williams

1. Fire Damage significant fiber damage - reported percentages reflect unaltered fibers
2. Fire Damage no significant fiber damages effecting fibrous percentages
3. Actinolite in association with Vermiculite
4. Layer not analyzed - attached to previous positive layer and contamination is suspected
5. Not enough sample to analyze
6. Anthophyllite in association with Fibrous Talc
7. Contamination suspected from other building materials
8. Favorable scenario for water separation on vermiculite for possible analysis by another method
9. < 1% Result point counted positive
10. TEM analysis suggested

CA Labs
Dedicated to Quality

Crisp Analytical, L.L.C.
2081 Hutton, Suite 301
Carrollton, TX 75006
Phone 972-488-1414
Fax 972-488-8006

CA Labs, L.L.C.
12232 Industriplex, Suite 32
Baton Rouge, LA 70809
Phone 225-751-5632
Fax 225-751-5634

Polarized Light Asbestiform Materials Characterization

Customer Info: **Attn:** Chad Kean
E3RA
9802 29th Avenue, Suite B102
Everett, WA 98204

Phone # 425-356-3372
Fax # 425-356-3374

Customer Project:
Columbia / E09034
Turnaround Time:
6-10 Day

CA Labs Project #:
CBR1001123

Date: 1/29/2010
Samples Received: 1/20/2010

Purchase Order #:

Sample #	Comment	Layer #	Analysts Physical Description of Subsample	Homogeneous (Y/N)	Asbestos type / calibrated visual estimate percent	Non-asbestos fiber type / percent	Non-fibrous type / percent
ES-01-1		*1*	*black sealant*	*Y*	***2% Chrysotile***	3% ce	95% qu, gy, bi
ES-01-2		*1*	*gray surfaced black sealant*	*N*	***2% Chrysotile***	2% ce	96% qu, bi
ES-01-3		*1*	*black sealant*	*Y*	***2% Chrysotile***		98% qu, gy, bi
ES-01-4		*1*	*black sealant*	*Y*	***2% Chrysotile***		98% qu, gy, bi
ES-01-5		*1*	*black sealant*	*Y*	***2% Chrysotile***		98% qu, gy, bi
GWB-01-1		*1*	*white surfaced white compound*	*N*	***None Detected***		100% qu, mi, ca
GWB-01-1		*2*	*white compound*	*Y*	***None Detected***	2% ce	98% qu, mi, ca

Baton Rouge NVLAP Lab Code 200772-0 TEM/PLM *TDH 30-0370*

LDEQ

Analysis Method: Interim (40CFR Part 763 Appendix E to Subpart E) / Improved (EPA-600 / R-93/116)
Preparation Method: HCL acid washing for carbonate based samples, chemical reduction for organically bound components, oil immersion for identification of asbestos types by dispersion attaining / becke line method.

ca - carbonate	mi - mica	fg - fiberglass	ce - cellulose
gypsum - gypsum	ve - vermiculite	mw - mineral wool	br - brucite
bi - binder	ot -other	wo - wollastinite	ka - kaolin (clay)
or - organic	pe - perlite	ta - talc	pa - palygorskite (clay)
ma - matrix	qu - quartz	sy - synthetic	

Approved Signatories:

Billie Poche
Analyst

Senior Analyst
Billie Poche

Laboratory Director
Chris Williams

1. Fire Damage significant fiber damage - reported percentages reflect unaltered fibers
2. Fire Damage no significant fiber damages effecting fibrous percentages
3. Actinolite in association with Vermiculite
4. Layer not analyzed - attached to previous positive layer and contamination is suspected
5. Not enough sample to analyze
6. Anthophyllite in association with Fibrous Talc
7. Contamination suspected from other building materials
8. Favorable scenario for water separation on vermiculite for possible analysis by another method
9. < 1% Result point counted positive
10. TEM analysis suggested

CA Labs
Dedicated to Quality

Crisp Analytical, L.L.C.
2081 Hutton, Suite 301
Carrollton, TX 75006
Phone 972-488-1414
Fax 972-488-8006

CA Labs, L.L.C.
12232 Industriplex, Suite 32
Baton Rouge, LA 70809
Phone 225-751-5632
Fax 225-751-5634

Polarized Light Asbestiform Materials Characterization

Customer Info: **Attn:** Chad Kean
E3RA
9802 29th Avenue, Suite B102
Everett, WA 98204

Phone # 425-356-3372
Fax # 425-356-3374

Customer Project:
Columbia / E09034
Turnaround Time:
6-10 Day

CA Labs Project #:
CBR1001123

Date: 1/29/2010
Samples Received: 1/20/2010

Purchase Order #:

Sample #	Comment	Layer #	Analysts Physical Description of Subsample	Homogeneous (Y/N)	Asbestos type / calibrated visual estimate percent	Non-asbestos fiber type / percent	Non-fibrous type / percent
GWB-01-1		*3*	*white drywall with brown paper*	*N*	***None Detected***	1% fg, 22% ce	77% qu, ca, gy
GWB-01-2		*1*	*white surfaced white compound*	*N*	***2% Chrysotile***		98% qu, mi, ca
GWB-01-2		*2*	*white compound*	*Y*	***2% Chrysotile***		98% qu, mi, ca
GWB-01-2		*3*	*white drywall with brown paper*	*N*	***None Detected***	2% fg, 22% ce	76% qu, gy
GWB-01-2		*4*	*composite of layers 1, 2, and 3*	*N*	***<1% Chrysotile***	1% fg, 8% ce	91% qu, ca, gy
GWB-01-3		*1*	*white surfaced white compound*	*N*	***2% Chrysotile***		98% qu, mi, ca
GWB-01-3	***5***	*2*	*white compound*	*Y*			

Baton Rouge NVLAP Lab Code 200772-0 TEM/PLM *TDH 30-0370*

LDEQ

Analysis Method: Interim (40CFR Part 763 Appendix E to Subpart E) / Improved (EPA-600 / R-93/116)
Preparation Method: HCL acid washing for carbonate based samples, chemical reduction for organically bound components, oil immersion for identification of asbestos types by dispersion attaining / becke line method.

ca - carbonate	mi - mica	fg - fiberglass	ce - cellulose
gypsum - gypsum	ve - vermiculite	mw - mineral wool	br - brucite
bi - binder	ot -other	wo - wollastinite	ka - kaolin (clay)
or - organic	pe - perlite	ta - talc	pa - palygorskite (clay)
ma - matrix	qu - quartz	sy - synthetic	

Approved Signatories:

Billie Poche
Analyst

Senior Analyst
Billie Poche

Laboratory Director
Chris Williams

1. Fire Damage significant fiber damage - reported percentages reflect unaltered fibers
2. Fire Damage no significant fiber damages effecting fibrous percentages
3. Actinolite in association with Vermiculite
4. Layer not analyzed - attached to previous positive layer and contamination is suspected
5. Not enough sample to analyze
6. Anthophyllite in association with Fibrous Talc
7. Contamination suspected from other building materials
8. Favorable scenario for water separation on vermiculite for possible analysis by another method
9. < 1% Result point counted positive
10. TEM analysis suggested

CA Labs
Dedicated to Quality

Crisp Analytical, L.L.C.
2081 Hutton, Suite 301
Carrollton, TX 75006
Phone 972-488-1414
Fax 972-488-8006

CA Labs, L.L.C.
12232 Industriplex, Suite 32
Baton Rouge, LA 70809
Phone 225-751-5632
Fax 225-751-5634

Polarized Light Asbestiform Materials Characterization

Customer Info: **Attn:** Chad Kean
E3RA
9802 29th Avenue, Suite B102
Everett, WA 98204

Phone # 425-356-3372
Fax # 425-356-3374

Customer Project:
Columbia / E09034
Turnaround Time:
6-10 Day

CA Labs Project #:
CBR1001123

Date: 1/29/2010
Samples Received: 1/20/2010

Purchase Order #:

Sample #	Comment	Layer #	Analysts Physical Description of Subsample	Homogeneous (Y/N)	Asbestos type / calibrated visual estimate percent	Non-asbestos fiber type / percent	Non-fibrous type / percent
GWB-01-3		*3*	*white drywall with brown paper*	*N*	***None Detected***	2% fg, 21% ce	77% qu, gy
GWB-01-3		*4*	*composite of layers 1 and 3*	*N*	***<1% Chrysotile***	1% fg, 5% ce	94% qy, ca, gy
GWB-01-4		*1*	*white surfaced white compound*	*N*	***2% Chrysotile***		98% qu, mi, ca
GWB-01-4		*2*	*white compound*	*Y*	***2% Chrysotile***		98% qu, mi, ca
GWB-01-4		*3*	*white drywall with brown paper*	*N*	***None Detected***	20% ce	80% qu, gy
GWB-01-4		*4*	*composite of layers 1, 2, and 3*	*N*	***<1% Chrysotile***	6% ce	94% qu, gy, ca
GWB-01-5		*1*	*white surfaced white compound*	*N*	***<1% Chrysotile***		100% qu, mi, ca

Baton Rouge NVLAP Lab Code 200772-0 TEM/PLM *TDH 30-0370*

LDEQ

Analysis Method: Interim (40CFR Part 763 Appendix E to Subpart E) / Improved (EPA-600 / R-93/116)
Preparation Method: HCL acid washing for carbonate based samples, chemical reduction for organically bound components, oil immersion for identification of asbestos types by dispersion attaining / becke line method.

ca - carbonate	mi - mica	fg - fiberglass	ce - cellulose
gypsum - gypsum	ve - vermiculite	mw - mineral wool	br - brucite
bi - binder	ot -other	wo - wollastinite	ka - kaolin (clay)
or - organic	pe - perlite	ta - talc	pa - palygorskite (clay)
ma - matrix	qu - quartz	sy - synthetic	

Approved Signatories:

Billie Poche
Analyst

Senior Analyst
Billie Poche

Laboratory Director
Chris Williams

1. Fire Damage significant fiber damage - reported percentages reflect unaltered fibers
2. Fire Damage no significant fiber damages effecting fibrous percentages
3. Actinolite in association with Vermiculite
4. Layer not analyzed - attached to previous positive layer and contamination is suspected
5. Not enough sample to analyze
6. Anthophyllite in association with Fibrous Talc
7. Contamination suspected from other building materials
8. Favorable scenario for water separation on vermiculite for possible analysis by another method
9. < 1% Result point counted positive
10. TEM analysis suggested

CA Labs
Dedicated to Quality

Crisp Analytical, L.L.C.
2081 Hutton, Suite 301
Carrollton, TX 75006
Phone 972-488-1414
Fax 972-488-8006

CA Labs, L.L.C.
12232 Industriplex, Suite 32
Baton Rouge, LA 70809
Phone 225-751-5632
Fax 225-751-5634

Polarized Light Asbestiform Materials Characterization

Customer Info: **Attn:** Chad Kean
E3RA
9802 29th Avenue, Suite B102
Everett, WA 98204

Phone # 425-356-3372
Fax # 425-356-3374

Customer Project:
Columbia / E09034
Turnaround Time:
6-10 Day

CA Labs Project #:
CBR1001123

Date: 1/29/2010
Samples Received: 1/20/2010

Purchase Order #:

Sample #	Comment	Layer #	Analysts Physical Description of Subsample	Homogeneous (Y/N)	Asbestos type / calibrated visual estimate percent	Non-asbestos fiber type / percent	Non-fibrous type / percent
GWB-01-5		*2*	*white compound*	*Y*	***<1% Chrysotile***		100% qu, mi, ca
GWB-01-5		*3*	*white drywall with brown paper*	*N*	***None Detected***	1% fg, 20% ce	79% qu, gy
GWB-01-5		*4*	*composite of layers 1, 2, and 3*	*N*	***<1% Chrysotile***	7% ce	93% qu, mi, gy, ca
GWB-01-6		*1*	*white surfaced white compound*	*N*	***<1% Chrysotile***		100% qu, mi, ca
GWB-01-6		*2*	*white compound*	*Y*	***<1% Chrysotile***		100% qu, mi, ca
GWB-01-6		*3*	*white drywall with brown paper*	*N*	***None Detected***	20% ce	80% qu, gy
GWB-01-6		*4*	*composite of layers 1, 2, and 3*	*N*	***<1% Chrysotile***	5% ce	95% qu, mi, gy, ca

Baton Rouge NVLAP Lab Code 200772-0 TEM/PLM *TDH 30-0370*

LDEQ

Analysis Method: Interim (40CFR Part 763 Appendix E to Subpart E) / Improved (EPA-600 / R-93/116)
Preparation Method: HCL acid washing for carbonate based samples, chemical reduction for organically bound components, oil immersion for identification of asbestos types by dispersion attaining / becke line method.

ca - carbonate	mi - mica	fg - fiberglass	ce - cellulose
gypsum - gypsum	ve - vermiculite	mw - mineral wool	br - brucite
bi - binder	ot -other	wo - wollastinite	ka - kaolin (clay)
or - organic	pe - perlite	ta - talc	pa - palygorskite (clay)
ma - matrix	qu - quartz	sy - synthetic	

Approved Signatories:

Billie Poche
Analyst

Senior Analyst
Billie Poche

Laboratory Director
Chris Williams

1. Fire Damage significant fiber damage - reported percentages reflect unaltered fibers
2. Fire Damage no significant fiber damages effecting fibrous percentages
3. Actinolite in association with Vermiculite
4. Layer not analyzed - attached to previous positive layer and contamination is suspected
5. Not enough sample to analyze
6. Anthophyllite in association with Fibrous Talc
7. Contamination suspected from other building materials
8. Favorable scenario for water separation on vermiculite for possible analysis by another method
9. < 1% Result point counted positive
10. TEM analysis suggested

CA Labs
Dedicated to Quality

Crisp Analytical, L.L.C.
2081 Hutton, Suite 301
Carrollton, TX 75006
Phone 972-488-1414
Fax 972-488-8006

CA Labs, L.L.C.
12232 Industriplex, Suite 32
Baton Rouge, LA 70809
Phone 225-751-5632
Fax 225-751-5634

Polarized Light Asbestiform Materials Characterization

Customer Info: **Attn:** Chad Kean
E3RA
9802 29th Avenue, Suite B102
Everett, WA 98204

Phone # 425-356-3372
Fax # 425-356-3374

Customer Project:
Columbia / E09034
Turnaround Time:
6-10 Day

CA Labs Project #:
CBR1001123

Date: 1/29/2010
Samples Received: 1/20/2010

Purchase Order #:

Sample #	Comment	Layer #	Analysts Physical Description of Subsample	Homogeneous (Y/N)	Asbestos type / calibrated visual estimate percent	Non-asbestos fiber type / percent	Non-fibrous type / percent
GWB-01-7		*1*	*white surfaced white compound*	*N*	***<1% Chrysotile***		100% qu, mi, ca
GWB-01-7		*2*	*white compound*	*Y*	***2% Chrysotile***	2% ce	96% qu, mi, ca
GWB-01-7		*3*	*white drywall with brown paper*	*N*	***None Detected***	22% ce	78% qu, gy
GWB-01-7		*4*	*composite of layers 1, 2, and 3*	*N*	***<1% Chrysotile***	6% ce	94% qu, mi, gy, ca
GWB-01-8		*1*	*white surfaced white compound*	*N*	***<1% Chrysotile***		100% qu, mi, ca
GWB-01-8		*2*	*white compound*	*Y*	***<1% Chrysotile***		100% qu, mi, ca
GWB-01-8		*3*	*white drywall with brown paper*	*N*	***None Detected***	22% ce	78% qu, gy

Baton Rouge NVLAP Lab Code 200772-0 TEM/PLM *TDH 30-0370*

LDEQ

Analysis Method: Interim (40CFR Part 763 Appendix E to Subpart E) / Improved (EPA-600 / R-93/116)
Preparation Method: HCL acid washing for carbonate based samples, chemical reduction for organically bound components, oil immersion for identification of asbestos types by dispersion attaining / becke line method.

ca - carbonate	mi - mica	fg - fiberglass	ce - cellulose
gypsum - gypsum	ve - vermiculite	mw - mineral wool	br - brucite
bi - binder	ot -other	wo - wollastinite	ka - kaolin (clay)
or - organic	pe - perlite	ta - talc	pa - palygorskite (clay)
ma - matrix	qu - quartz	sy - synthetic	

Approved Signatories:

Billie Poche
Analyst

Senior Analyst
Billie Poche

Laboratory Director
Chris Williams

1. Fire Damage significant fiber damage - reported percentages reflect unaltered fibers
2. Fire Damage no significant fiber damages effecting fibrous percentages
3. Actinolite in association with Vermiculite
4. Layer not analyzed - attached to previous positive layer and contamination is suspected
5. Not enough sample to analyze
6. Anthophyllite in association with Fibrous Talc
7. Contamination suspected from other building materials
8. Favorable scenario for water separation on vermiculite for possible analysis by another method
9. < 1% Result point counted positive
10. TEM analysis suggested

CA Labs
Dedicated to Quality

Crisp Analytical, L.L.C.
2081 Hutton, Suite 301
Carrollton, TX 75006
Phone 972-488-1414
Fax 972-488-8006

CA Labs, L.L.C.
12232 Industriplex, Suite 32
Baton Rouge, LA 70809
Phone 225-751-5632
Fax 225-751-5634

Polarized Light Asbestiform Materials Characterization

Customer Info: **Attn:** Chad Kean
E3RA
9802 29th Avenue, Suite B102
Everett, WA 98204

Phone # 425-356-3372
Fax # 425-356-3374

Customer Project:
Columbia / E09034
Turnaround Time:
6-10 Day

CA Labs Project #:
CBR1001123

Date: 1/29/2010
Samples Received: 1/20/2010

Purchase Order #:

Sample #	Comment	Layer #	Analysts Physical Description of Subsample	Homogeneous (Y/N)	Asbestos type / calibrated visual estimate percent	Non-asbestos fiber type / percent	Non-fibrous type / percent
GWB-01-8		*4*	*composite of layers 1, 2, and 3*	*N*	***<1% Chrysotile***	7% ce	93% qu, mi, gy, ca
GWB-01-9		*1*	*white surfaced white compound*	*N*	***<1% Chrysotile***		100% qu, mi, ca
GWB-01-9		*2*	*white compound*	*Y*	***<1% Chrysotile***		100% qu, mi, ca
GWB-01-9		*3*	*white drywall with brown paper*	*N*	***None Detected***	24% ce	76% qu, gy
GWB-01-9		*4*	*composite of layers 1, 2, and 3*	*N*	***<1% Chrysotile***	5% ce	95% qu, mi, gy, ca
GWB-01-10		*1*	*white surfaced white compound*	*N*	***<1% Chrysotile***		100% qu, mi, ca
GWB-01-10		*2*	*white compound*	*Y*	***<1% Chrysotile***		100% qu, mi, ca

Baton Rouge NVLAP Lab Code 200772-0 TEM/PLM *TDH 30-0370*

LDEQ

Analysis Method: Interim (40CFR Part 763 Appendix E to Subpart E) / Improved (EPA-600 / R-93/116)
Preparation Method: HCL acid washing for carbonate based samples, chemical reduction for organically bound components, oil immersion for identification of asbestos types by dispersion attaining / becke line method.

ca - carbonate	mi - mica	fg - fiberglass	ce - cellulose
gypsum - gypsum	ve - vermiculite	mw - mineral wool	br - brucite
bi - binder	ot -other	wo - wollastinite	ka - kaolin (clay)
or - organic	pe - perlite	ta - talc	pa - palygorskite (clay)
ma - matrix	qu - quartz	sy - synthetic	

Approved Signatories:

Billie Poche
Analyst

Senior Analyst
Billie Poche

Laboratory Director
Chris Williams

1. Fire Damage significant fiber damage - reported percentages reflect unaltered fibers
2. Fire Damage no significant fiber damages effecting fibrous percentages
3. Actinolite in association with Vermiculite
4. Layer not analyzed - attached to previous positive layer and contamination is suspected
5. Not enough sample to analyze
6. Anthophyllite in association with Fibrous Talc
7. Contamination suspected from other building materials
8. Favorable scenario for water separation on vermiculite for possible analysis by another method
9. < 1% Result point counted positive
10. TEM analysis suggested

CA Labs
Dedicated to Quality

Crisp Analytical, L.L.C.
2081 Hutton, Suite 301
Carrollton, TX 75006
Phone 972-488-1414
Fax 972-488-8006

CA Labs, L.L.C.
12232 Industriplex, Suite 32
Baton Rouge, LA 70809
Phone 225-751-5632
Fax 225-751-5634

Polarized Light Asbestiform Materials Characterization

Customer Info: **Attn:** Chad Kean
E3RA
9802 29th Avenue, Suite B102
Everett, WA 98204

Phone # 425-356-3372
Fax # 425-356-3374

Customer Project:
Columbia / E09034
Turnaround Time:
6-10 Day

CA Labs Project #:
CBR1001123

Date: 1/29/2010
Samples Received: 1/20/2010

Purchase Order #:

Sample #	Comment	Layer #	Analysts Physical Description of Subsample	Homogeneous (Y/N)	Asbestos type / calibrated visual estimate percent	Non-asbestos fiber type / percent	Non-fibrous type / percent
GWB-01-10		*3*	*white drywall with brown paper*	*N*	***None Detected***	20% ce	80% qu, gy
GWB-01-10		*4*	*composite of layers 1, 2, and 3*	*N*	***<1% Chrysotile***	6% ce	94% qu, mi, gy, ca
GWB-01-11		*1*	*white surfaced white compound*	*N*	***<1% Chrysotile***		100% qu, mi, ca
GWB-01-11		*2*	*white compound*	*Y*	***<1% Chrysotile***		100% qu, mi, ca
GWB-01-11		*3*	*composite of layers 1 and 2*	*N*	***<1% Chrysotile***		100% qu, mi, ca
GWB-01-12		*1*	*white surfaced white compound*	*N*	***2% Chrysotile***		98% qu, mi, ca
GWB-01-12		*2*	*white compound*	*Y*	***<1% Chrysotile***		100% qu, mi, ca

Baton Rouge NVLAP Lab Code 200772-0 TEM/PLM *TDH 30-0370*

LDEQ

Analysis Method: Interim (40CFR Part 763 Appendix E to Subpart E) / Improved (EPA-600 / R-93/116)
Preparation Method: HCL acid washing for carbonate based samples, chemical reduction for organically bound components, oil immersion for identification of asbestos types by dispersion attaining / becke line method.

ca - carbonate	mi - mica	fg - fiberglass	ce - cellulose
gypsum - gypsum	ve - vermiculite	mw - mineral wool	br - brucite
bi - binder	ot -other	wo - wollastinite	ka - kaolin (clay)
or - organic	pe - perlite	ta - talc	pa - palygorskite (clay)
ma - matrix	qu - quartz	sy - synthetic	

Approved Signatories:

Billie Poche
Analyst

Senior Analyst
Billie Poche

Laboratory Director
Chris Williams

1. Fire Damage significant fiber damage - reported percentages reflect unaltered fibers
2. Fire Damage no significant fiber damages effecting fibrous percentages
3. Actinolite in association with Vermiculite
4. Layer not analyzed - attached to previous positive layer and contamination is suspected
5. Not enough sample to analyze
6. Anthophyllite in association with Fibrous Talc
7. Contamination suspected from other building materials
8. Favorable scenario for water separation on vermiculite for possible analysis by another method
9. < 1% Result point counted positive
10. TEM analysis suggested

CA Labs
Dedicated to Quality

Crisp Analytical, L.L.C.
2081 Hutton, Suite 301
Carrollton, TX 75006
Phone 972-488-1414
Fax 972-488-8006

CA Labs, L.L.C.
12232 Industriplex, Suite 32
Baton Rouge, LA 70809
Phone 225-751-5632
Fax 225-751-5634

Polarized Light Asbestiform Materials Characterization

Customer Info: **Attn:** Chad Kean
E3RA
9802 29th Avenue, Suite B102
Everett, WA 98204

Phone # 425-356-3372
Fax # 425-356-3374

Customer Project:
Columbia / E09034
Turnaround Time:
6-10 Day

CA Labs Project #:
CBR1001123

Date: 1/29/2010
Samples Received: 1/20/2010

Purchase Order #:

Sample #	Comment	Layer #	Analysts Physical Description of Subsample	Homogeneous (Y/N)	Asbestos type / calibrated visual estimate percent	Non-asbestos fiber type / percent	Non-fibrous type / percent
GWB-01-12		*3*	*white drywall with brown paper*	*N*	***None Detected***	22% ce	78% qu, gy
GWB-01-12		*4*	*composite of layers 1, 2, and 3*	*N*	***<1% Chrysotile***	6% ce	94% qu, mi, gy, ca
GWB-01-13		*1*	*white surfaced white compound*	*N*	***<1% Chrysotile***		100% qu, mi, ca
GWB-01-13		*2*	*white compound*	*Y*	***<1% Chrysotile***	3% ce	97% qu, mi, ca
GWB-01-13		*3*	*white drywall with brown paper*	*N*	***None Detected***	23% ce	77% qu, gy
GWB-01-13		*4*	*composite of layers 1, 2, and 3*	*N*	***<1% Chrysotile***	7% ce	93% qu, mi, gy, ca
GWB-01-14		*1*	*white surfaced white compound*	*N*	***<1% Chrysotile***		100% qu, mi, ca

Baton Rouge NVLAP Lab Code 200772-0 TEM/PLM *TDH 30-0370*

LDEQ

Analysis Method: Interim (40CFR Part 763 Appendix E to Subpart E) / Improved (EPA-600 / R-93/116)
Preparation Method: HCL acid washing for carbonate based samples, chemical reduction for organically bound components, oil immersion for identification of asbestos types by dispersion attaining / becke line method.

ca - carbonate	mi - mica	fg - fiberglass	ce - cellulose
gypsum - gypsum	ve - vermiculite	mw - mineral wool	br - brucite
bi - binder	ot -other	wo - wollastinite	ka - kaolin (clay)
or - organic	pe - perlite	ta - talc	pa - palygorskite (clay)
ma - matrix	qu - quartz	sy - synthetic	

Approved Signatories:

Billie Poche
Analyst

Senior Analyst
Billie Poche

Laboratory Director
Chris Williams

1. Fire Damage significant fiber damage - reported percentages reflect unaltered fibers
2. Fire Damage no significant fiber damages effecting fibrous percentages
3. Actinolite in association with Vermiculite
4. Layer not analyzed - attached to previous positive layer and contamination is suspected
5. Not enough sample to analyze
6. Anthophyllite in association with Fibrous Talc
7. Contamination suspected from other building materials
8. Favorable scenario for water separation on vermiculite for possible analysis by another method
9. < 1% Result point counted positive
10. TEM analysis suggested

CA Labs
Dedicated to Quality

Crisp Analytical, L.L.C.
2081 Hutton, Suite 301
Carrollton, TX 75006
Phone 972-488-1414
Fax 972-488-8006

CA Labs, L.L.C.
12232 Industriplex, Suite 32
Baton Rouge, LA 70809
Phone 225-751-5632
Fax 225-751-5634

Polarized Light Asbestiform Materials Characterization

Customer Info: **Attn:** Chad Kean
E3RA
9802 29th Avenue, Suite B102
Everett, WA 98204

Phone # 425-356-3372
Fax # 425-356-3374

Customer Project:
Columbia / E09034
Turnaround Time:
6-10 Day

CA Labs Project #:
CBR1001123

Date: 1/29/2010
Samples Received: 1/20/2010

Purchase Order #:

Sample #	Comment	Layer #	Analysts Physical Description of Subsample	Homogeneous (Y/N)	Asbestos type / calibrated visual estimate percent	Non-asbestos fiber type / percent	Non-fibrous type / percent
GWB-01-14		*2*	*white compound*	*Y*	***<1% Chrysotile***		100% qu, mi, ca

Baton Rouge NVLAP Lab Code 200772-0 TEM/PLM *TDH 30-0370*

LDEQ

Analysis Method: Interim (40CFR Part 763 Appendix E to Subpart E) / Improved (EPA-600 / R-93/116)
Preparation Method: HCL acid washing for carbonate based samples, chemical reduction for organically bound components, oil immersion for identification of asbestos types by dispersion attaining / becke line method.

ca - carbonate	mi - mica	fg - fiberglass	ce - cellulose
gypsum - gypsum	ve - vermiculite	mw - mineral wool	br - brucite
bi - binder	ot -other	wo - wollastinite	ka - kaolin (clay)
or - organic	pe - perlite	ta - talc	pa - palygorskite (clay)
ma - matrix	qu - quartz	sy - synthetic	

Approved Signatories:

Billie Poche
Analyst

Senior Analyst
Billie Poche

Laboratory Director
Chris Williams

1. Fire Damage significant fiber damage - reported percentages reflect unaltered fibers
2. Fire Damage no significant fiber damages effecting fibrous percentages
3. Actinolite in association with Vermiculite
4. Layer not analyzed - attached to previous positive layer and contamination is suspected
5. Not enough sample to analyze
6. Anthophyllite in association with Fibrous Talc
7. Contamination suspected from other building materials
8. Favorable scenario for water separation on vermiculite for possible analysis by another method
9. < 1% Result point counted positive
10. TEM analysis suggested

Crisp Analytical Laboratories

Chain of Custody

CA Labs Job # 1001123

12232 Industrialplex – Suite 32
Baton Rouge, LA
225-751-5632 / 225-751-5634 Fax

www.crisplabs.com

2081 Hutton Dr. – Suite 301
Carrollton, TX 75006
972-488-1414 / 972-488-8006 Fax

Company Name: E3RA

Address: 9802 29th Ave. West, Suite B102 – Everett, WA 98204

Project Name/Number: Columbia 1E09034

Phone/Fax: 425-356-3372 / 425-356-3374

Contact Person: Chad Kean

Reports VIA: Email X Fax____ Verbal____

Email: ckean@e3ra.com

(Check The Appropriate Box)

TEM	
	Air - AHERA
	Air – EPA Level II
	Air - NIOSH
	Bulk - Chatfield
	Micro-vac ASTM
	Wipe - ASTM
	Drinking Water

PLM	
X	Bulk – AHERA
	Bulk – Improved Interim
	Point Count - AHERA
	Point Count - NESHAPS
	Add Gravimetric $20

Total Samples Submitted: 45

Turnaround Time (Circle the Appropriate Time): 6-10 day

ASAP	Same Day	24 Hour	48 Hour	3 Days	5 Days

Allergen / Mold	
	Tape / Bulk / Swab
	Cyclex – d Cassettes
	Air-O-Cell

PCM	
	AIR – NIOSH

LEAD	
	Paint
	Soil
	Air
	Wipes
	Waste Water
	TCLP

Viable Fungus	
	Anderson
	Swab / Sponge
	Fungi Genus ID
	Enumeration add $10

Bacterial Analysis	
	Bacterial count/Gram Stain ID – Anderson Plates
	Bacterial count/Gram Stain ID – Bacterial Count – Swab/Sponge
	Bacterial Genus Species ID
	Detection/*Pseudomonas aeruginosa*
	Detection/*E.coli/Fecal Streptococcus/Enterococcus/ Salmonella*

Sample #	Location	Date/Time	Volume
on attached Sheet			

Relinquished By: [signature] 1/19/10 (Signature / Date) Received By: [signature] (Signature / Date)

Relinquished By: ____ (Signature / Date) Received By: 1/20/10 9:30 (Signature / Date)

CBR1001123

Columbia Asbestos Samples

Sample #	Notes:
CB-01-1	
SVF-01-1	
SVF-01-2	
VT-01-1	
CB-02-1	
LC-01-1	
SVF-02-1	
CB-03-1	
SVF-03-1	
SVF-04-1	
SVF-05-1	
RF-01-1	
RF-01-2	
RF-01-3	
RF-01-4	
RF-01-5	
EC-01-1	
AD-01-1	
WG-01-1	
FB-01-1	
IS-01-1	
SU-01-1	
SU-01-2	
AD-02-1	
SU-02-1	
SU-03-1	
ES-01-1	
ES-01-2	
ES-01-3	
ES-01-4	
ES-01-5	
GWB-01-1	Gypsum Wallboard and Joint Compound Sample, Please report results by layer and composite if any layer is positive
GWB-01-2	Gypsum Wallboard and Joint Compound Sample, Please report results by layer and composite if any layer is positive
GWB-01-3	Gypsum Wallboard and Joint Compound Sample, Please report results by layer and composite if any layer is positive
GWB-01-4	Gypsum Wallboard and Joint Compound Sample, Please report results by layer and composite if any layer is positive
GWB-01-5	Gypsum Wallboard and Joint Compound Sample, Please report results by layer and composite if any layer is positive
GWB-01-6	Gypsum Wallboard and Joint Compound Sample, Please report results by layer and composite if any layer is positive
GWB-01-7	Gypsum Wallboard and Joint Compound Sample, Please report results by layer and composite if any layer is positive
GWB-01-8	Gypsum Wallboard and Joint Compound Sample, Please report results by layer and composite if any layer is positive
GWB-01-9	Gypsum Wallboard and Joint Compound Sample, Please report results by layer and composite if any layer is positive

CBR1001123

GWB-01-10	Gypsum Wallboard and Joint Compound Sample, Please report results by layer and composite if any layer is positive
GWB-01-11	Gypsum Wallboard and Joint Compound Sample, Please report results by layer and composite if any layer is positive
GWB-01-12	Gypsum Wallboard and Joint Compound Sample, Please report results by layer and composite if any layer is positive
GWB-01-13	Gypsum Wallboard and Joint Compound Sample, Please report results by layer and composite if any layer is positive
GWB-01-14	Gypsum Wallboard and Joint Compound Sample, Please report results by layer and composite if any layer is positive

CA Labs
Dedicated to Quality

Crisp Analytical, L.L.C.
2081 Hutton, Suite 301
Carrollton, TX 75006
Phone 972-488-1414
Fax 972-488-8006

CA Labs, L.L.C.
12232 Industriplex, Suite 32
Baton Rouge, LA 70809
Phone 225-751-5632
Fax 225-751-5634

Materials Characterization - Bulk Asbestos Analysis

Laboratory Analysis Report - Polarized Light

E3RA
9802 29th Avenue, Suite B102
Everett, WA 98204

Attn: Chad Kean
Customer Project: Columbia / E09034
Reference #: CBR1002355 Date 2/17/2010

Analysis and Method

Summary of polarizing light microscopy (PLM / Stereomicroscopy bulk asbestos analysis) using the methods described in 40CFR Part 763 Appendix E to Subpart E (Interim and EPA 600 / R-93 / 116 (Improved). The sample is first viewed with the aid of stereomicroscopy. Numerous liquid slide preparations are created for analysis under the polarized microscope where identifications and quantifications are preformed. Calibrated liquid refractive oils are used as liquid mouting medium. These oils are used for identification (dispersion staining). A calibrated visual estimation is reported, should any asbestiform mineral be present. Other techniques such as acid washing are used in conjugation with refractive oils for detection of smaller quantities of asbestos. All asbestos percentages are based on calibrated visual estimation traceable to NIST standards for regulated of asbestos. Traceability to measurement and calibration is achieved by using known amounts and types of asbestos from standards where analyst and laboratory accuracy are measured. As little as 0.001% asbestos can be detected in favorable samples, while detection in unfavorable samples may approach the

Discussion

Vermiculite containing samples may have trace amounts of actinolite-tremolite, where not found be PLM should be analyzed using TEM methods and / or water separation techniques. Suspected actinolite/vermiculite presence will be indicated through the sample comment section of this report.

Fibrous talc containing samples may even contain a related asbestos fiber known as anthophyllite. Under certain conditions the same fiber may actually contain both talc and anthophyllite (a phenomenon called intergrowth). Again, TEM detection methods are recommended. CA Labs PLM report comments will denote suspected amounts of asbestiform anthophyllite with talc, where further analysis is recommended.

Some samples (floor tiles, surfacings, etc.) may contain fibers too small to be delectable by PLM analysis and should be analyzed by TEM bulk protocols.

A "trace asbestos" will be reported if the analyst observes far less than 1% asbestos. CA Labs defines "trace asbestos" as a few fibers detected by the analyst in several preparations and will indicate as such under these circumstances.

Quantification of <1% will actually be reported as <=1% (allowable variance close to 1% is high). Such results are ideal for point counting, and the technique is mandatory for friable samples (NESHAP, Nov. 1990 and clarification letter 8 May 1991) under 1% percent asbestos and the "trace asbestos". **In order to make all initial PLM reports issued from CA Labs NESHAP compliant, all <1% asbestos results (except floor tiles) will be point counted at no additional charge.**

Qualifications

CA Labs is accredited by NVLAP for selected test methods for bulk asbestos fiber analysis (PLM) and airborne fiber analysis (TEM). All analysts have a college degree in a natural science (geology, biology, or environmental science) or are recognized by a state professional board in one these disciplines .Extensive in-house training programs are used to augment education background of the analyst. The group leader of polarized light has received supplemental McCrone Research training for asbestos identification. This report is not covered by the scope of AIHA accreditation. Analysis performed at CA Labs, LLC 12232 Industriplex, Suite 32 Baton Rouge, LA 70809.

Baton Rouge NVLAP Lab Code 200772-0 TEM/PLM *TDH 30-0370*
LDEQ

CA Labs
Dedicated to Quality

Crisp Analytical, L.L.C.
2081 Hutton, Suite 301
Carrollton, TX 75006
Phone 972-488-1414
Fax 972-488-8006

CA Labs, L.L.C.
12232 Industriplex, Suite 32
Baton Rouge, LA 70809
Phone 225-751-5632
Fax 225-751-5634

Overview of Project Sample Material Containing Asbestos

Customer Project: Columbia / E09034 **CA Labs Project #:** CBR1002355

Sample #	Layer #	Analysts Physical Description of Subsample	Asbestos type / calibrated visual estimate percent	List of Affected Building Material Types
				white textured surfacing
ST-06-1	*1*	*white textured surfacing*	***<1% Chrysotile***	
ST-06-2	*1*	*white textured surfacing*	***<1% Chrysotile***	
ST-06-3	*1*	*white textured surfacing*	***<1% Chrysotile***	
ST-06-4	*1*	*white textured surfacing*	***<1% Chrysotile***	
ST-06-5	*1*	*white textured surfacing*	***<1% Chrysotile***	
ST-06-7	*1*	*white textured surfacing*	***<1% Chrysotile***	
ST-06-8	*1*	*white textured surfacing*	***<1% Chrysotile***	
ST-06-9	*1*	*white textured surfacing*	***<1% Chrysotile***	

Baton Rouge NVLAP Lab Code 200772-0 TEM/PLM *TDH 30-0370*
LDEQ

Glossary of abbreviations (non-asbestos fibers and non-fibrous minerals):

ca - carbonate
gypsum - gypsum
bi - binder
or - organic
ma - matrix
mi - mica
ve - vermiculite
ot - other

pe - perlite
qu - quartz

fg - fiberglass
mw - mineral wool
wo - wollastinite
ta - talc
sy - synthetic
ce - cellulose
br - brucite
ka - kaolin (clay)

pa - palygorskite (clay)

CA Labs
Dedicated to Quality

Crisp Analytical, L.L.C.
2081 Hutton, Suite 301
Carrollton, TX 75006
Phone 972-488-1414
Fax 972-488-8006

CA Labs, L.L.C.
12232 Industriplex, Suite 32
Baton Rouge, LA 70809
Phone 225-751-5632
Fax 225-751-5634

Overview of Project Sample Material Containing Asbestos

Customer Project: Columbia / E09034 **CA Labs Project #:** CBR1002355

Sample #	Layer #	Analysts Physical Description of Subsample	Asbestos type / calibrated visual estimate percent	List of Affected Building Material Types
ST-06-10	*1*	*white textured surfacing*	***<1% Chrysotile***	
ST-06-11	*1*	*white textured surfacing*	***<1% Chrysotile***	
ST-06-12	*1*	*white textured surfacing*	***<1% Chrysotile***	
ST-06-13	*1*	*white textured surfacing*	***<1% Chrysotile***	
ST-06-14	*1*	*white textured surfacing*	***<1% Chrysotile***	
ST-06-15	*1*	*white textured surfacing*	***<1% Chrysotile***	

Baton Rouge NVLAP Lab Code 200772-0 TEM/PLM *TDH 30-0370*
LDEQ

Glossary of abbreviations (non-asbestos fibers and non-fibrous minerals):

ca - carbonate
gypsum - gypsum
bi - binder
or - organic
ma - matrix
mi - mica
ve - vermiculite
ot - other
pe - perlite
qu - quartz
fg - fiberglass
mw - mineral wool
wo - wollastinite
ta - talc
sy - synthetic
ce - cellulose
br - brucite
ka - kaolin (clay)
pa - palygorskite (clay)

CA Labs
Dedicated to Quality

Crisp Analytical, L.L.C.
2081 Hutton, Suite 301
Carrollton, TX 75006
Phone 972-488-1414
Fax 972-488-8006

CA Labs, L.L.C.
12232 Industriplex, Suite 32
Baton Rouge, LA 70809
Phone 225-751-5632
Fax 225-751-5634

Polarized Light Asbestiform Materials Characterization

Customer Info: **Attn:** Chad Kean
E3RA
9802 29th Avenue, Suite B102
Everett, WA 98204

Phone # 425-356-3372
Fax # 425-356-3374

Customer Project:
Columbia / E09034
Turnaround Time:
5 Day

CA Labs Project #:
CBR1002355

Date: 2/17/2010
Samples Received: 2/12/2010

Purchase Order #:

Sample #	Comment	Layer #	Analysts Physical Description of Subsample	Homogeneous (Y/N)	Asbestos type / calibrated visual estimate percent	Non-asbestos fiber type / percent	Non-fibrous type / percent
ST-06-1		*1*	*white textured surfacing*	*Y*	***<1% Chrysotile***	2% ce	98% qu, mi, ca
ST-06-2		*1*	*white textured surfacing*	*Y*	***<1% Chrysotile***	3% ce	97% qu, mi, ca
ST-06-3		*1*	*white textured surfacing*	*Y*	***<1% Chrysotile***	2% ce	98% qu, mi, ca
ST-06-4		*1*	*white textured surfacing*	*Y*	***<1% Chrysotile***	2% ce	98% qu, mi, ca
ST-06-5		*1*	*white textured surfacing*	*Y*	***<1% Chrysotile***	2% ce	98% qu, mi, ca
ST-06-7		*1*	*white textured surfacing*	*Y*	***<1% Chrysotile***	2% ce	98% qu, mi, ca
ST-06-8		*1*	*white textured surfacing*	*Y*	***<1% Chrysotile***	2% ce	98% qu, mi, ca

Baton Rouge NVLAP Lab Code 200772-0 TEM/PLM *TDH 30-0370*

LDEQ

Analysis Method: Interim (40CFR Part 763 Appendix E to Subpart E) / Improved (EPA-600 / R-93/116)
Preparation Method: HCL acid washing for carbonate based samples, chemical reduction for organically bound components, oil immersion for identification of asbestos types by dispersion attaining / becke line method.

ca - carbonate	mi - mica	fg - fiberglass	ce - cellulose
gypsum - gypsum	ve - vermiculite	mw - mineral wool	br - brucite
bi - binder	ot -other	wo - wollastinite	ka - kaolin (clay)
or - organic	pe - perlite	ta - talc	pa - palygorskite (clay)
ma - matrix	qu - quartz	sy - synthetic	

Approved Signatories:

Billie Poche
Analyst

Senior Analyst
Billie Poche

Laboratory Director
Chris Williams

1. Fire Damage significant fiber damage - reported percentages reflect unaltered fibers
2. Fire Damage no significant fiber damages effecting fibrous percentages
3. Actinolite in association with Vermiculite
4. Layer not analyzed - attached to previous positive layer and contamination is suspected
5. Not enough sample to analyze
6. Anthophyllite in association with Fibrous Talc
7. Contamination suspected from other building materials
8. Favorable scenario for water separation on vermiculite for possible analysis by another method
9. < 1% Result point counted positive
10. TEM analysis suggested

CA Labs
Dedicated to Quality

Crisp Analytical, L.L.C.
2081 Hutton, Suite 301
Carrollton, TX 75006
Phone 972-488-1414
Fax 972-488-8006

CA Labs, L.L.C.
12232 Industriplex, Suite 32
Baton Rouge, LA 70809
Phone 225-751-5632
Fax 225-751-5634

Polarized Light Asbestiform Materials Characterization

Customer Info: **Attn:** Chad Kean
E3RA
9802 29th Avenue, Suite B102
Everett, WA 98204

Phone # 425-356-3372
Fax # 425-356-3374

Customer Project:
Columbia / E09034
Turnaround Time:
5 Day

CA Labs Project #:
CBR1002355

Date: 2/17/2010
Samples Received: 2/12/2010

Purchase Order #:

Sample #	Comment	Layer #	Analysts Physical Description of Subsample	Homogeneous (Y/N)	Asbestos type / calibrated visual estimate percent	Non-asbestos fiber type / percent	Non-fibrous type / percent
ST-06-9		*1*	*white textured surfacing*	*Y*	***<1% Chrysotile***	2% ce	98% qu, mi, ca
ST-06-10		*1*	*white textured surfacing*	*Y*	***<1% Chrysotile***	2% ce	98% qu, mi, ca
ST-06-11		*1*	*white textured surfacing*	*Y*	***<1% Chrysotile***	3% ce	97% qu, mi, ca
ST-06-12		*1*	*white textured surfacing*	*Y*	***<1% Chrysotile***	2% ce	98% qu, mi, ca
ST-06-13		*1*	*white textured surfacing*	*Y*	***<1% Chrysotile***	2% ce	98% qu, mi, ca
ST-06-14		*1*	*white textured surfacing*	*Y*	***<1% Chrysotile***	2% ce	98% qu, mi, ca
ST-06-15		*1*	*white textured surfacing*	*Y*	***<1% Chrysotile***	2% ce	98% qu, mi, ca

Baton Rouge NVLAP Lab Code 200772-0 TEM/PLM *TDH 30-0370*

LDEQ

Analysis Method: Interim (40CFR Part 763 Appendix E to Subpart E) / Improved (EPA-600 / R-93/116)
Preparation Method: HCL acid washing for carbonate based samples, chemical reduction for organically bound components, oil immersion for identification of asbestos types by dispersion attaining / becke line method.

ca - carbonate	mi - mica	fg - fiberglass	ce - cellulose
gypsum - gypsum	ve - vermiculite	mw - mineral wool	br - brucite
bi - binder	ot -other	wo - wollastinite	ka - kaolin (clay)
or - organic	pe - perlite	ta - talc	pa - palygorskite (clay)
ma - matrix	qu - quartz	sy - synthetic	

Approved Signatories:

Billie Poche
Analyst

Senior Analyst
Billie Poche

Laboratory Director
Chris Williams

1. Fire Damage significant fiber damage - reported percentages reflect unaltered fibers
2. Fire Damage no significant fiber damages effecting fibrous percentages
3. Actinolite in association with Vermiculite
4. Layer not analyzed - attached to previous positive layer and contamination is suspected
5. Not enough sample to analyze
6. Anthophyllite in association with Fibrous Talc
7. Contamination suspected from other building materials
8. Favorable scenario for water separation on vermiculite for possible analysis by another method
9. < 1% Result point counted positive
10. TEM analysis suggested

CA Labs
Dedicated to Quality

Crisp Analytical, L.L.C.
2081 Hutton, Suite 301
Carrollton, TX 75006
Phone 972-488-1414
Fax 972-488-8006

CA Labs, L.L.C.
12232 Industriplex, Suite 32
Baton Rouge, LA 70809
Phone 225-751-5632
Fax 225-751-5634

Polarized Light Asbestiform Materials Point Count

Laboratory Analysis Report - Point Count

Analysis and Method

Point counting was performed on a polarized light microscope with a calibrated reticle according to the revised NESHAP method of November 20, 1990 (Federal Register, V.55, N.224, 11/20/90). Origional asbestos content of bulk materials was determined using procedures outlined in the interim method (40 CFR part 763, Appendix E to subpart E) and AHERA method (EPA-600/R-93/116). Samples were prepared using HCL acid washing for carbonate based samples, chemical reduction for organically bound components, oil immersion for identification of asbestos types by dispersion staining / becke line method.

Qualifications

CA Labs is accredited by NVLAP for selected test methods for bulk asbestos fiber analysis (PLM) and airborne fiber analysis (TEM). All analysts have a college degree in a natural science (geology, biology, or environmental science) or are recognized by a state professional board in one of these disciplines. Extensive in-house training programs are used to augment education background of the analyst. The group leader of polarized light has received supplemental McCrone Research training for asbestos identification. This report is not covered by the scope of NVLAP accreditation. Analysis performed at CA Labs, LLC 12232 Industriplex, Suite 32 Baton Rouge, LA 70809.

Customer Info: **Attn:** Chad Kean
E3RA
9802 29th Avenue, Suite B102
Everett, WA 98204

Phone # 425-356-3372
Fax # 425-356-3374

Customer Project:
Columbia / E09034
Turnaround Time:
5 Day

CA Labs Project #:
CBR1002355

Date: 2/17/2010
Samples Received: 2/12/2010

Purchase Order #:

Sample #	Layer #	Analysts Physical Description of Subsample	Homo-geneous (Y/N)	Point Counted % / Asbestos Type
ST-06-1	*1*	*white textured surfacing*	*Y*	***trace Chrysotile***
ST-06-2	*1*	*white textured surfacing*	*Y*	***0.50% Chrysotile***
ST-06-3	*1*	*white textured surfacing*	*Y*	***trace Chrysotile***

Baton Rouge NVLAP Lab Code 200772-0 TEM/PLM *TDH 30-0370*

LDEQ

Approved Signatories:

Billie Poche
Analyst

Senior Analyst
Billie Poche

Laboratory Director
Chris Williams

CA Labs
Dedicated to Quality

Crisp Analytical, L.L.C.
2081 Hutton, Suite 301
Carrollton, TX 75006
Phone 972-488-1414
Fax 972-488-8006

CA Labs, L.L.C.
12232 Industriplex, Suite 32
Baton Rouge, LA 70809
Phone 225-751-5632
Fax 225-751-5634

Polarized Light Asbestiform Materials Point Count

Laboratory Analysis Report - Point Count

Customer Info: **Attn:** Chad Kean
E3RA
9802 29th Avenue, Suite B102
Everett, WA 98204

Phone # 425-356-3372
Fax # 425-356-3374

Customer Project:
Columbia / E09034
Turnaround Time:
5 Day

CA Labs Project #:
CBR1002355

Date: 2/17/2010
Samples Received: 2/12/2010

Purchase Order #:

Sample #	Layer #	Analysts Physical Description of Subsample	Homo-geneous (Y/N)	Point Counted % / Asbestos Type
ST-06-4	*1*	*white textured surfacing*	*Y*	***trace Chrysotile***
ST-06-5	*1*	*white textured surfacing*	*Y*	***0.50% Chrysotile***
ST-06-7	*1*	*white textured surfacing*	*Y*	***0.25% Chrysotile***
ST-06-8	*1*	*white textured surfacing*	*Y*	***0.25% Chrysotile***
ST-06-9	*1*	*white textured surfacing*	*Y*	***trace Chrysotile***
ST-06-10	*1*	*white textured surfacing*	*Y*	***trace Chrysotile***
ST-06-11	*1*	*white textured surfacing*	*Y*	***0.25% Chrysotile***

Baton Rouge NVLAP Lab Code 200772-0 TEM/PLM *TDH 30-0370*

LDEQ

Approved Signatories:

Billie Poche
Analyst

Senior Analyst
Billie Poche

Laboratory Director
Chris Williams

CA Labs
Dedicated to Quality

Crisp Analytical, L.L.C.
2081 Hutton, Suite 301
Carrollton, TX 75006
Phone 972-488-1414
Fax 972-488-8006

CA Labs, L.L.C.
12232 Industriplex, Suite 32
Baton Rouge, LA 70809
Phone 225-751-5632
Fax 225-751-5634

Polarized Light Asbestiform Materials Point Count

Laboratory Analysis Report - Point Count

Customer Info: **Attn:** Chad Kean
E3RA
9802 29th Avenue, Suite B102
Everett, WA 98204

Phone # 425-356-3372
Fax # 425-356-3374

Customer Project:
Columbia / E09034
Turnaround Time:
5 Day

CA Labs Project #:
CBR1002355

Date: 2/17/2010
Samples Received: 2/12/2010

Purchase Order #:

Sample #	Layer #	Analysts Physical Description of Subsample	Homo-geneous (Y/N)	Point Counted % / Asbestos Type
ST-06-12	*1*	*white textured surfacing*	*Y*	***0.50% Chrysotile***
ST-06-13	*1*	*white textured surfacing*	*Y*	***0.75% Chrysotile***
ST-06-14	*1*	*white textured surfacing*	*Y*	***0.25% Chrysotile***
ST-06-15	*1*	*white textured surfacing*	*Y*	***0.75% Chrysotile***

Baton Rouge NVLAP Lab Code 200772-0 TEM/PLM *TDH 30-0370*

LDEQ

Approved Signatories:

Billie Poche Analyst	Senior Analyst Billie Poche	Laboratory Director Chris Williams

Crisp Analytical Laboratories

Chain of Custody

CA Labs Job # 1002355

12232 Industrialplex – Suite 32
Baton Rouge, LA
225-751-5632 / 225-751-5634 Fax

www.crisplabs.com

2081 Hutton Dr. – Suite 301
Carrollton, TX 75006
972-488-1414 / 972-488-8006 Fax

Company Name: E3RA

Address: 9802 29th Ave. West, Suite B102 – Everett, WA 98204

Project Name/Number: Columbia / E09034

Phone/Fax: 425-356-3372 / 425-356-3374

Contact Person: Chad Kean

Reports VIA: Email X Fax_____ Verbal_____

Email: ckean@e3ra.com

(Check The Appropriate Box)

TEM	
	Air - AHERA
	Air – EPA Level II
	Air - NIOSH
	Bulk - Chatfield
	Micro-vac ASTM
	Wipe - ASTM
	Drinking Water

PLM	
X	Bulk – AHERA
	Bulk – Improved Interim
	Point Count - AHERA
	Point Count - NESHAPS
	Add Gravimetric $20

Allergen / Mold	
	Tape / Bulk / Swab
	Cyclex – d Cassettes
	Air-O-Cell

PCM	
	AIR – NIOSH

LEAD	
	Paint
	Soil
	Air
	Wipes
	Waste Water
	TCLP

Viable Fungus	
	Anderson
	Swab / Sponge
	Fungi Genus ID
	Enumeration add $10

Bacterial Analysis	
	Bacterial count/Gram Stain ID – Anderson Plates
	Bacterial count/Gram Stain ID – Bacterial Count – Swab/Sponge
	Bacterial Genus Species ID
	Detection/*Pseudomonas aeruginosa*
	Detection/*E.coli/Fecal Streptococcus/Enterococcus/ Salmonella*

Total Samples Submitted: 14

Turnaround Time (Circle the Appropriate Time)

ASAP	Same Day	24 Hour	48 Hour	3 Days	5 Days

Sample #	Location	Date/Time	Volume
On attached sheet			

Relinquished By: [signature] 2/11/10 (Signature / Date)

Received By: M. Gunnbellad (Signature / Date) 2/12/10 9:35

Relinquished By: _____ (Signature / Date)

Received By: _____ (Signature / Date)

CBR1002355

Columbia Asbestos Samples

Sample #	Notes:
ST-06-1	
ST-06-2	
ST-06-3	
ST-06-4	
ST-06-5	
ST-06-7	
ST-06-8	
ST-06-9	
ST-06-10	
ST-06-11	
ST-06-12	
ST-06-13	
ST-06-14	
ST-06-15	

APPENDIX C

INSPECTOR CERTIFICATIONS

Certificate of Completion

PRESENTED BY:

COLE AND ASSOCIATES, TRAINING AND CONSULTING, INC.

THIS IS TO CERTIFY THAT

ADAM A. STAUFFER

17817 80TH AVE. N.E., UNIT B3 KENMORE, WA 98204

HAS SUCCESSFULLY COMPLETED THE STATE OF FLORIDA APPROVED

AHERA BUILDING INSPECTOR

TRAINING COURSE

AS REQUIRED BY 40 CFR 763, SUBPART E, APPENDIX C

PROVIDER NUMBER 0003574

STARTING ON TUESDAY, SEPTEMBER 08, 2009
ENDING ON THURSDAY, SEPTEMBER 10, 2009

COLE AND ASSOCIATES TRAINING AND CONSULTING INC.

Brenda Lambriel	
Training Administrator	Training Director
3508-09-09-5367	9/10/2010
Certification Number	Expiration Date

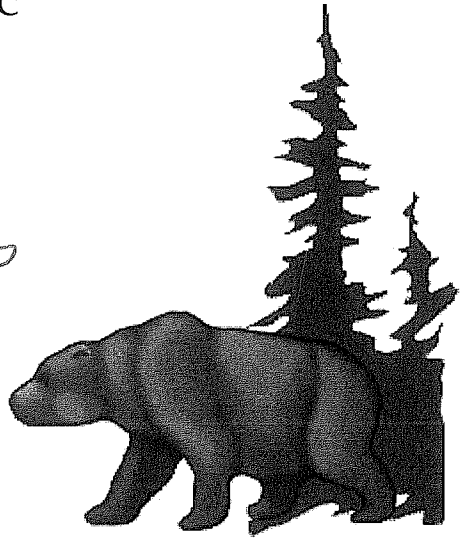

Cole and Associates, Training and Consulting Inc, 18062 72nd Ave S
Kent, WA 98032 (425) 793-5505 Fax (425) 793-5552
1-877-455-BEAR and 1-888-414-8008
www.ctcbear.com

Certificate of Completion

This is to certify that

Casey R. Lowe

has satisfactorily completed
4 hours of refresher training as an

Asbestos Building Inspector

to comply with the training requirements of
TSCA Title II / 40 CFR 763 (AHERA)

Certificate Number: 104662

Instructor

EPA Provider Cert. Number: 1085

ARGUS PACIFIC
TRAINING • CONSULTING

Oct 21, 2009
Date(s) of Training

Exam Score: NA

Expiration Date: Oct 21, 2010

Argus Pacific, Inc. • 1900 W. Nickerson, Suite 315 • Seattle, Washington • 98119 • (206) 285.3373 • fax (206) 285.3927

Certificate of Completion

This is to certify that

Chad D. Kean

has satisfactorily completed
4 hours of refresher training as an

Asbestos Building Inspector

to comply with the training requirements of
TSCA Title II / 40 CFR 763 (AHERA)

Certificate Number: 10304383

Instructor

EPA Provider Cert. Number: 1085

ARGUS PACIFIC
TRAINING • CONSULTING

Mar 11, 2009
Date(s) of Training

Exam Score: NA

Expiration Date: Mar 11, 2010

Argus Pacific, Inc. • 1900 W. Nickerson, Suite 315 • Seattle, Washington • 98119 • (206) 285.3373 • fax (206) 285.3927

STATE OF WASHINGTON

Department of Community, Trade and Economic Development
Lead-Based Paint Program

Chad Kean

Has fulfilled the certification requirements of Washington Administrative code (WAC) 365-230 and has been certified to conduct lead-based paint activities pursuant to WAC 365-230-200 as a:

Inspector

Certification #	Issuance Date	Expiration Date
0670	1/11/2008	1/11/2011

STATE OF WASHINGTON

Department of Community, Trade and Economic Development
Lead-Based Paint Program

Chad Kean

Has fulfilled the certification requirements of Washington Administrative code (WAC) 365-230 and has been certified to conduct lead-based paint activities pursuant to WAC 365-230-200 as a:

Risk Assessor

Certification #	Issuance Date	Expiration Date
0670	1/11/2008	1/11/2011

APPENDIX D

LABORATORY CERTIFICATIONS

United States Department of Commerce
National Institute of Standards and Technology

NVLAP®

Certificate of Accreditation to ISO/IEC 17025:2005

NVLAP LAB CODE: 200772-0

CA Labs L.L.C.

Baton Rouge, LA

is accredited by the National Voluntary Laboratory Accreditation Program for specific services, listed on the Scope of Accreditation, for:

BULK ASBESTOS FIBER ANALYSIS

This laboratory is accredited in accordance with the recognized International Standard ISO/IEC 17025:2005. This accreditation demonstrates technical competence for a defined scope and the operation of a laboratory quality management system (refer to joint ISO-ILAC-IAF Communique dated January 2009).

2010-01-01 through 2010-12-31

Effective dates

DEPARTMENT OF COMMERCE ★ UNITED STATES OF AMERICA ★

Sally S. Bruce

For the National Institute of Standards and Technology

NVLAP-01C (REV. 2009-01-28)